Contents

Center for Maritime Archaeology & Conservation

CMAC News & Reports

Vol. 2 No. 2

Fall 2010

On the cover: Archaeologists excavate the site of an Iron Age Phoenician shipwreck, at the base of Bajo de la Campana.

To download a .PDF of this file, click here.

From the Director

All Issues

Welcome to the Fall, 2010, edition of the CMAC News & Reports. If you've already taken a look at the table of contents on the previous page, you probably had a reaction similar to mine: "Good Lord! Look at all of these reports! Did the folks associated with the Center for Maritime Archaeology and Conservation really do all of this in 2010?" The short answer is yes, and in fact there was much, much more that isn't here. Chris Cartellone, the Editor of CMAC News & Reports, tells me there are far more potential articles about ongoing student and faculty research than there is space in the next issue. Clearly, this has been a good year for the Center and for nautical and maritime archaeology at Texas A&M University (TAMU).

The broad geographical, cultural, and subject range of the studies sponsored wholly or in part by CMAC is, frankly, pretty impressive. If you don't believe me, just read the following articles. There are projects as varied as the documentation of an intact Gold Rush era paddle wheel steamer sunk in Canada's Yukon River, a survey for 16th and 17th century wrecks in Puerto Rico, the mapping of a Royal Navy frigate sunk in 1782 off the island of Nevis in the Caribbean, and the start of a major excavation on an early English colonization ship wrecked on Bermuda in 1619. On the far side of the Atlantic Ocean, the excavation of a 6th or 7th-century B.C. Phoenician ship on the coast of Spain continued, a TAMU student participated in the search for wrecks in the deepest Mediterranean, and the piece-by-piece recording of two beautifully-preserved Byzantine shipwrecks got underway in the Institute of Nautical Archaeology center in Bodrum, Turkey. Also in Bodrum labs, as well as back home in TAMU's Conservation Research Laboratory, incredible feats of artifact conservation and recording, as well as hull reconstructions, were taking place on a daily basis. Four of them are featured here. Any one or two of these archaeological projects would be significant accomplishments for a university center, but thanks to the talented, motivated students, staff, and faculty engaged in this research, the truly extraordinary is commonplace. I feel very lucky to be associated with this crowd.

In nautical archaeology, as in so many other fields of scientific endeavor, the very best research is the result of cooperative endeavors between people, institutions, and countries. CMAC and Texas A&M do not work in a vacuum, but rely on the shared knowledge and resources of colleagues from around the world. Our many partners-in-archaeology are acknowledged in the following articles, but special mention must be made of the directors and staff of the Institute of Nautical Archaeology, whose efforts have opened so many doors and provided vital funding and equipment.

So, enjoy this issue of the CMAC News & Reports, and stay tuned for future issues. — Kevin Crisman

Faculty Profile: Deborah Carlson

Deborah Carlson is the most recently-tenured faculty member of the Nautical Archaeology Program (NAP) and 2011 President-Elect of the Institute of Nautical Archaeology (INA). Deborah is a classical archaeologist interested in the ships, cargoes, and maritime traditions of the ancient Greeks and Romans. She arrived in College Station 15 years ago as an incoming NAP graduate student from Tucson, Arizona, where she had completed a B.A. in Classics and an M.A. in Classical Archaeology at the University of Arizona. "I benefited from some fantastic opportunities while a graduate student at Arizona," says Carlson. Those opportunities included multiple excavation seasons at important Classical sites in Italy and Greece, including the Temple of Athena at Tegea, where archaeologists uncovered the remains of several much earlier temple structures within and beneath the foundations of the fourth century B.C. temple so famous for its sculptural program.

But more opportunities lay ahead for Carlson as a NAP graduate student; she enrolled in Classical Seafaring with Professor George Bass and wrote a research paper about the symbolic roles of the ancient helmsman; Bass liked the paper so much that he invited her to join the staff of a team he was assembling to excavate the remains of a Classical Greek shipwreck off the Turkish coast at Tektaş Burnu (ca. 440-425 B.C.). Carlson served as field director at Tektaş Burnu for three summers (1999-2001) and ultimately completed her 2004 doctoral dissertation at the University of

CMAC News and Reports.

Vol 1. No. 1 WEB | PDF

Vol. 2 No. 1 WEB | PDF

Vol. 2 No. 2 WEB | PDF

Texas on the amphora cargo from this historically important shipwreck. By that time, however, Professor Bass had retired and there was an opening in the ranks of the NAP faculty, which Carlson was honored and delighted to fill.

Today Deborah teaches undergraduate courses in Greek and Roman archaeology, Latin, and that very same Classical Seafaring course that proved so pivotal to her graduate career. In 2005 she took up the excavation of another ancient shipwreck off the Turkish coast at Kızılburun, a vessel lost while transporting a single massive marble column composed of several pieces and weighing more than 50 tons. It probably dates to the first century B.C. In addition to publishing the results of her archaeological fieldwork in Turkey, Deborah has also written articles about various cultural aspects of ancient seafaring, from votive coins set under the mast to marble eyes decorating the bow. She serves as the current president of the College Station chapter of the Archaeological Institute of America (AIA) and is an active member of the AIA's National Lecture Program. Carlson comments that "sometimes, after I give a lecture about the work that we do, an audience member will ask me how I came to pursue a career in nautical archaeology, and I explain that I owe it all to my parents, who only ever insisted that I learn how to do two things in life: read Latin and scuba dive. Whether they knew it or not, those proved to be two of the most influential ingredients in my life's recipe!"

Scholarships, Awards & Recognition

Marine Technology Society

2010 Marine Archaeology Scholarship

Awarded to NAP Student Lindsey Thomas

Thomas Family Scholarship Announced
André Thomas from Electronic Arts

In early Spring 2010 André Thomas, a member of Texas A&M University's VizLab Board of Visualization Industry Partners and an avid maritime archaeology enthusiast, approached Dr. Filipe Castro of CMAC's Ship Reconstruction Laboratory with an opportunity to collaborate closely on projects. Through his experience and expertise in the visualization industry and his active engagement in the field of maritime archaeology, André decided to establish the Thomas Family Scholarship dedicated to projects spanning both disciplines. This idea of cross-discipline research received very warm welcomes from both departments, Tim McLaughlin, Head of the Department of Visualization Sciences at Texas A&M, and Filipe Castro.

Visit video examples on the internet at:
http://www.youtube.com/nauticalarchaeology#p/u/0/zLhBJqNN0_s
http://www.youtube.com/nauticalarchaeology#p/u/2/XWikxlKzkYE

Together we are looking forward to a new era of collaboration and sharing while advancing the fields of Maritime Archaeology and Visualization through practical application and applied research, while benefiting from independent funds to be used for that purpose.
—Andre Thomas

Peter Amaral Fellowship: Three Students Discuss Their Research

Kelby Rose

My research focused on investigating the design methods employed by the original shipwright to conceive of and construct Vasa, the 1628 Swedish warship. Although the ship was built in Stockholm by order of the Swedish King Gustav II Adolf, it was designed by a Dutch shipwright and constructed in the shipbuilding tradition of the northern Netherlands. Research by nautical archaeologists and maritime historians has produced a reasonably clear understanding of the construction methods used in this tradition; the design methods, however, remain less well understood. As the only intact 17th-century ship of its kind, Vasa provides researchers with a remarkable opportunity to gain insight into the Dutch tradition.

The Peter Amaral Fellowship has afforded me two opportunities to significantly advance my research into the shipbuilding and design practices of the 17th-century Netherlands. First, it enabled me to travel to the Netherlands and Sweden to collect the necessary data and visit people and places of importance to my area of study. Second, it allowed me to enroll in a 4-week, intensive, Dutch language course at Utrecht University in the Netherlands. Dutch is a language rarely offered by American universities, though gaining proficiency in it is essential to my studies. During my time in the Netherlands,I also visited the collections of the Rijksmuseum in Amsterdam and the National Maritime Archaeology Service in Lelystad, both of which house material relating directly to early modern shipbuilding and design. I met with experts to forge collaborative relationships that will result in high quality scholarship. While in Stockholm, I met with researchers at the Vasa Museum, examined the hull of Vasa for indications of its design method, and collected and reviewed the data on the shape and structure of the vessel. Upon returning to College Station, I began a rigorous analysis of the data to determine the methods by which the shipwright designed Vasa. The results of this investigation will lead to a better understanding of Dutch shipbuilding in the 17th century and early modern naval architecture.

Coral Eginton

The Western Australia Maritime Museum Shipwreck Galleries is housed in one of Fremantle's oldest buildings. Though the architecture dates back to 1851, the technology utilized within the Maritime Archaeology department is quite cutting edge. As part of my research on the surgeons and medical supplies of the Dutch East India Company (VOC), I am analyzing the apothecary jars from Batavia (1625), Vergulde Draak (1656) and Zeewijk (1727). Recently I have been using the museum's Bruker Tracer III handheld XRF machine to classify the glazes on the jars. The next step will be to use the machine to identify some of the preserved contents from inside the jars.

Both of these pieces of information lead to a better understanding of the VOC and shipboard medicine. By analyzing the glazes we may be able to trace the jars all the way back to their region of origin or even their specific manufacturers. Through this we can gain knowledge on the purchasing and stocking trends of the VOC. By examining the contents of the surgeon's stores we will see which medicines were being used to treat the crew and what ailments commonly plagued them.

So far, my time at the Western Australia Museum has been a great experience. I have been able to learn some very useful new skills and apply them to my own research. This amazing opportunity was made possible, greatly in part, by Dr. Peter Amaral who honored me with a $1,500 sponsorship this past spring. Thanks to his support and his encouragement, my research dream became a reality. Being a doctor himself, he was enthusiastic about my proposal and I hope to share with him some truly interesting results when return this winter.

Carlos Monroy

My name is Carlos Monroy, I am a Ph.D. candidate in Computer Science (graduating in August 2010) and recipient of a graduate fellowship from the Nautical Archaeology Program at A&M. In the last four years I have been working with the Nautical Archaeology Digital Library (NADL), a joint project between the Center for the Study of Digital Libraries and the Center for Maritime Archaeology and Conservation. This fellowship allowed me to work on the development of an infrastructure for assisting archaeologists: a multilingual glossary of nautical terms (12 languages), a collection of digitized shipbuilding treatises available online, a full-text index engine enabling multilingual retrieval of transcriptions and other written materials, and various navigation and visualization prototypes.

In collaboration with Dr. Filipe Castro, I created an ontology for describing wooden ships. The ontology draws from the pioneering work of Dick Steffy documenting hundreds of shipwrecks. This is a step toward adopting new approaches for searching and exploring information pertaining to wooden vessels. In addition, this fellowship allowed me to publish various articles related to this collaboration, including a chapter in the forthcoming Oxford Handbook of Maritime Archaeology.

This fellowship has very special meaning to me. It is first of all, a tremendous help from a financial standpoint, it allowed me to cover tuition expenses and finish my dissertation. More importantly, it shows the benefits of multidisciplinary collaboration, of which Computer Science has also benefited tremendously. Little did I know what a conversation with Drs. Wendy van Duivenvoorde and Filipe Castro would bring to my academic future. It has been a fascinating research journey for me, and for this I am grateful to Dr. Peter Amaral for sponsoring this fellowship.

Visiting Lecturer: Dr. Qu Jinliang
Institute of Maritime Culutures
Ocean University of China

On September 30th the NAP visiting lecturer series was pleased to present two talks by Dr. Qu Jinliang, Director of the Institute of Maritime Cultures at Ocean University of China. In an afternoon lecture, Dr. Qu discussed the development and continued importance of the Sea Goddess to China's cultural heritage. Describing mythology, veneration and depictions of the Sea Goddess, Dr. Qu explained the wide impact that various manifestations have had on China's maritime community. In the evening, Dr. Qu provided a public lecture at Evans Library explaining maritime heritage preservation policy in China. He briefly outlined some of the regional and global impacts of Chinese seafaring, and argued that maps focused on the Atlantic cause us to forget the importance of maritime connections throughout the Pacific Region. Dr. Qu expressed the hope that researchers within the U.S. and China can develop academic ties to further explore our common Pacific maritime heritage, and looks forward to future cooperation between the Nautical Archaeology Program and the Institute of Maritime Cultures in China.

2010 Nautical Archaeology Program Theses & Dissertations

Lilia Campana, M.A., "Vettor Fausto (1490-1546): Professor of Greek and a Naval Architect. A New Light on the 16th-century Manuscript *Misure di vascelli etc. di...proto dell'Arsenale di Venetia*."

Pearce Paul Creasman, Ph.D., "Extracting Cultural Information from Ship Timbers."

John Eastlund, M.A., non-thesis option.

Matthew Labbe, M.A., "A Preliminary Reconstruction of the Yassiada Sixteenth Century Ottoman Wreck."

Megan Smith, M.A., "A Necessary Duty, A Hideous Fault: Digital Technology and the Ethics of Archaeological Conservation."

Theses and dissertations are available online at http://nautarch.tamu.edu/academic/alum.htm

---

Forthcoming Publication:

The Oxford Handbook of Maritime Archaeology
Edited by Alexis Catsambis, Ben Ford, and Donny L. Hamilton

Contributions include chapters from current NAP faculty and many former students. This comprehensive survey from nearly fifty scholars covers a wide range of topics within the discipline: research, shipwrecks, maritime culture, and preservation issues. Available from Oxford University Press in May 2011.

Shipwreck Weekend, *Arrrgghhh Matey!*
15-16 April 2011

Open to the Public.
An exciting weekend of ships, archaeology, and exploration.

Details online at
http://nautarch.tamu.edu/shipwreck_weekend/

Out in the Field: Nautical Students Participate in CMAC Sponsored Survey Training Seminars

The thrill of discovering shipwrecks often begins with comprehensive field surveys using a variety of remote sensing equipment. This year students in the Nautical Archaeology Program at Texas A&M University trained with field instruments and computer software to collect and process survey data. Specifically, students learned to use magnetometers, single-beam side-scan sonars, global positioning systems (GPS), and Hypack hydrographic survey software. These training programs were facilitated in the spring by J.B. Pelletier, Senior Nautical Archaeologist and Remote Sensing Specialist at URS Corporation, and in the fall by Christian Shaw, Technical Support Specialist with Hypack Corporation.

Nautical students spent a full week in May with Pelletier learning several facets of maritime remote sensing survey. Pelletier began the course by covering safety concerns and the risks of working in a maritime environment. Topics covered included radio usage, safe boat handling, ropes and knots, understanding weather, and more. Following two days of classroom studies, students had the opportunity to plan out their own survey on a small utility lake at the Texas A&M University's Riverside Campus. After creating their own search grids in Hypack, students practiced setting-up and securing survey equipment on a small aluminum boat, keeping both safety and usability in mind. Activities then moved to the water as participants worked in groups to run multiple survey lanes and collect data with a magnetometer, side scan sonar, and GPS. The last day of course found Pelletier teaching students how to process, analyze, and interpret the collected field data.

In September, students were invited to attend another training seminar conducted by Shaw on the intricacies of Hypack. This course focused more on the pragmatic issues of creating and utilizing computer based maritime surveys. In many ways, this training reiterated and reinforced the material covered by Pelletier. Students learned methods for how to geo-reference maps, delineate survey grids, and process collected data. The fall training provided a quick, but thorough, introduction to the capabilities of Hypack and the more technical aspects of remote sensing software.

Collecting accurate data from a rolling vessel at sea can be challenging, but its a real world scenario that nautical archaeologists could potentially face. Attention must be paid to safety concerns, boat handling, computers, GPS devices, and survey instruments, all aspects of the job that should be learned and well understood before entering the field. These training opportunities allow students to prepare and conduct maritime surveys in a controlled environment under the watchful eye of a seasoned professional. A great deal of thanks is owed to both J.B Pelletier and Christian Shaw for their assistance with these training efforts. Also, URS Corporation and Hypack each deserve recognition for their commitment to education and helping to advance the next generation of remote sensing specialists.

Students with J.B. Pelletier (third from right).
Photo: Bradley Krueger

A.J. Goddard: 2010 Field Season

Lindsey Thomas
Center for Maritime Archaeology and Conservation, Texas A&M University

When the steamer *Excelsior* puffed into San Francisco on 15 July 1897, the world received news of gold in the Yukon Territory, Canada. Before a year had passed, nearly 100,000 men and women attempted to reach the Klondike gold fields, located near Dawson City. Though it was possible to travel by land, a journey upon the Yukon River was often inevitable due to the terrain, and everything from hastily constructed rafts to fleets of steamers from San Francisco set out for the Klondike. Many of these ships and boats wrecked upon the Yukon River and its tributaries, or were abandoned on its shores. In 2008, Yukoner Doug Davidge and the Yukon River Survey team discovered the sternwheeler *A.J. Goddard* in Lake Laberge, Yukon Territory. Prefabricated in San Francisco and carried over the White Pass in segments, the *A.J. Goddard* is the only known surviving example of one of the small Yukon River sternwheelers. Sitting upright on the lakebed as a result of a 1901 October storm, the ship and its cargo have not moved since the ship's abandonment over 100 years ago (fig. 1).[1]

Following a successful field season in 2009 during which the Yukon River Survey Project team created a basic site plan and preliminary artifact catalogue, the team returned to the *A.J. Goddard* site in June 2010. With the assistance of the Yukon Territorial Government, ProMare, CMAC, the Institute for Nautical Archaeology, Spiegel-TV, BlueView Technologies, OceanGate, and private donors, a 14-person team returned to the site for 10 days. The objectives of the 2010 field season were to complete the baseline survey of the wreck, to create a 3-D site plan using the Blue View BV5000 multibeam sonar, to locate and record all extant artifacts both on and around the ship, and to recover select artifacts for conservation and display at the Yukon Transportation Museum.

Figure 1: *Goddard*'s bow in the murky depths. Photo: Geoff Bell.

Using the 2009 site plan as a guide, the team focused on recording hull construction features, including the machinery, steering systems, and lines. Due to the vessel's small size and shallow draft, it was not possible to penetrate the hull to fully document the interior. However, it was possible to see inside of the vessel with the aid of a light and the accessibility provided by the 12 hatches. The majority of the interior of the vessel was recorded, although a layer of sediment four-inches deep inside the hull prohibited the accurate recording of the bottom. The steering system is still intact and was recorded, with the exception of the missing wheelhouse.

Through the donated support of BlueView Technologies and OceanGate, a tripod-mounted and diver-deployed multibeam sonar (the BV 5000) was used to create a 3-D site plan. Over the course of two days, divers set the tripod in 18 different locations to create a detailed point cloud of the vessel's shape. While the sonar image of the ship is useful, particularly for a site with very limited visibility, the most valuable aspect of the sonar unit was its ability to see inside remote sections of the hull. Hull construction details that were otherwise inaccessible to divers, such as the spacing of deck beams, were visible and measureable on the computer screen within minutes of the scan. Though data processing is in the preliminary stages, it is possible that hull lines could be extracted from the scans of the hull interior. While it was possible to take partial lines of the hull exterior using a plumb bob and tape measure, the bottom was inaccessible due to sediment deposited around the exterior. Taking slices of the scanned data may allow the hull lines to be reconstructed from the 3-D model.

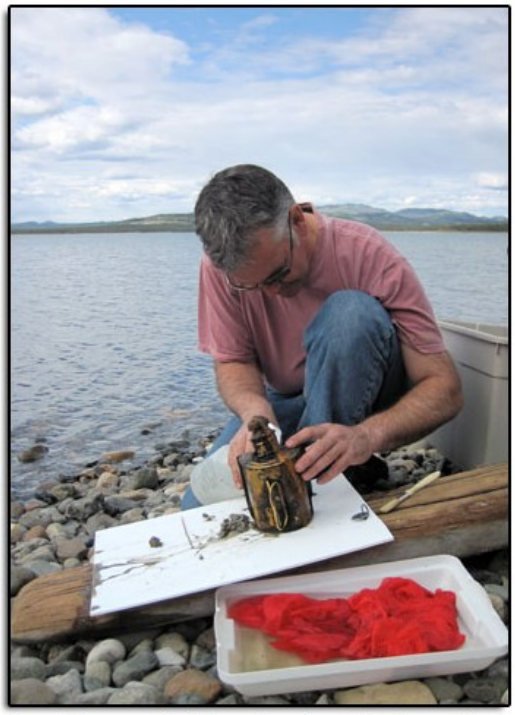

Figure 2: Team member Wayne Lusardi examines lantern. Photo: Geoff Bell.

Though some artifacts lie on the deck, most are scattered around the vessel in a debris field extending at least ten meters in all directions. One hundred artifacts were recorded using trilateration and photography, though more are still scattered around the site. Divers recovered 28 artifacts for exhibit in Whitehorse, including some surprising finds (fig. 2). A record player and two and a half records were recovered, along with clothing, full bottles of ink and vanilla, and a prohibition era bottle that was tossed onto the site decades after the wrecking event.

The 2010 field season filled many gaps in our knowledge about the *A.J. Goddard* and the vessels of the Klondike Gold Rush. It has become evident that the hull of the *A.J. Goddard* possessed a simple construction design, possibly to facilitate its reassembly in the wilderness. The structural components are relatively uniform, with 2-inch angle-iron used for the framing, the stanchions, the deck beams, and the hatch coamings. Much of the machinery and other structural components of the ship, such as the deck plating, could be disassembled into small pieces to facilitate transport over mountain ranges. Many of the vessel's fixtures, from the utilitarian forge to the more luxurious record player, can be found in the 1897 issue of the Sears and Roebuck catalogue. Of the thousands of vessels that set out for the Yukon in the summer of 1898, the *A.J. Goddard* was one of the few that actually made it to Dawson in time for the gold rush. Its small size and the speed with which it was outfitted and transported to Dawson were the primary reasons for its success in reaching the gold fields so quickly.

Note

1. "Str. *Goddard* Wrecked on Lake Laberge," *The Daily Klondike Nugget*, 14 October 1901.

Reference

"Str. *Goddard* Wrecked on Lake Laberge," *The Daily Klondike Nugget*, 14 October 1901.

Nautical Archaeology in Puerto Rico: Summer 2010 Field Work

Filipe Castro
Center for Maritime Archaeology and Conservation, Texas A&M University

Chris Cartellone
Center for Maritime Archaeology and Conservation, Texas A&M University

Juan Vera
Consejo para la Conservación y Estudio de Sitios y Recursos Arqueológicos Subacuáticos, El Arsenal, La Puntilla, Viejo San Juan, Puerto Rico

Richard Fontanez
Instituto de Investigaciones Costaneras, Puerto Rico

Gustavo Garcia
Instituto de Investigaciones Costaneras, Puerto Rico

Alexander Fontanez
Instituto de Investigaciones Costaneras, Puerto Rico

Figure 1: Survey Team Left-to-Right: Cartellone, Castro, Martínez, Gargia, A. Fontanez, R. Fontanez, Vera.

During the summer of 2010 a joint team from Texas A&M University's Center for Maritime Archaeology and Conservation, the *Consejo para la Conservación y Estudio de Sitios y Recursos Arqueológicos Subacuáticos*, and the*Instituto de Investigaciones Costaneras*, surveyed a small stretch of the Island's west coast, around the town of Rincón, with the support of the Institute of Nautical Archaeology (fig. 1). This small village, founded in the late 18th century in a breathtakingly beautiful area of the country, is sometimes called the town of the beautiful sunsets and a well-known touristic surfing destination in Latin America. In 2009 Texas A&M University was invited by the *Instituto de Cultura Puertoriqueña* and the *Alcaldia* of Rincón to excavate the Rincón Astrolabe Shipwreck (Rincón 1), but the presence of a precious and fragile coral reef located very close to the Rincón shipwreck's ballast pile called for careful preparation.

The 2010 Summer Season consisted of a survey of the purported positions of four shipwrecks known to exist in the Rincón area, with a special focus on the Rincón Shipwreck, which we will designate from now on as the Rincón 1 Shipwreck (fig. 2).

Rincón 1 Shipwreck

Also known as the Rincón Astrolabe Shipwreck, it was found in December 1986 by Richard Fitzgerald, a long time Rincón resident. One of the co-authors of this paper, Gustavo Garcia, has written extensively on this shipwreck.[1] A few days later Richard and a friend started recovering artifacts from the site and were eventually joined by a second friend, Mikal Woods, and his father. The artifacts recovered from the small ballast pile included pins, scissors, one gun, cannon balls, pewter ware, woodworking tools, and a number of small concretions. As more people joined the group of salvors, the find of a nautical astrolabe – the first valuable artifact – created tensions in the group, which broke apart, the four finders on one side and three newly invited members on the other.

In June 1987 the second group made a video of the site, while the original group produced a sketch of the ballast pile . We have not been able to locate the video. That summer a prop-wash blaster – mailbox – was used on the site by the second group, and discussions about the possibility of selling the astrolabe in Florida pushed one of salvors to ask the authorities to stop the operations. In mid-August the government intervened and a legal process ensued that ended in 2009. Coincidentally, a few days earlier, on August 7 1987, Law 10 had been enacted as Puerto Rico's submerged and coastal cultural resources law, following the interest shown in the previous year by treasure hunter Mel Fisher in Puerto Rican waters. Although not retroactive, this law inspired the courts in determining the destiny of the artifact assemblage. In November 1988 an inventory of the artifacts was made by a state archaeologist and later the majority of the artifact assemblage, including the astrolabe, was transferred to San Juan where it underwent a process of conservation and recording. Unfortunately, a hurricane destroyed the laboratory in the late 1990s, and few artifacts remained unharmed, though the astrolabe survived.

Figure 2: Filipe Castro probes the sand for the Rincón wreck. Photo: Chris Cartellone.

Still living in Rincón, Mikal Woods and Richard Fitzgerald were instrumental in reconstructing the story of the site and helping us relocate it, now covered with perhaps as many as nine feet of sand. Their notes and photographs were extremely useful and filled in some important blanks in our research. We located the position of the ship's ballast pile, but as our permit did not allow any intrusive action, we postponed trenching to a later opportunity.

At this time it is impossible to judge whether this site can be *Defiance*, one of Prince Rupert's ships lost in a 1652 hurricane, with his brother Maurice on board, as has been hypothesized in the past. The possibility cannot be excluded, but we lack evidence one way or the other. According to perhaps the most reliable source, the ship may have washed ashore *"upon the Southward side of the Island [of Puerto Rico]"* where *"they found a shipp cast away and several pieces of the wreck came ashore; and amongst the rest a Goulden Lyon wch some of them saw and a great quantitie of pipestaves markt MP as all prince Maurice his cask[s] were."*[2] *Defiance*'s last know position is 70 nautical miles to the north of Sombrero Island, or about 250 nautical miles from Rincón.[3] The astrolabe – possibly of Iberian origin – has the date 1616 engraved upon it, and one of the pewter plates has a mark traceable to Nicholas Kelk, active between at least 1641 and 1687.[4] Only further analysis of the existing artifacts, and perhaps a full excavation of the site, will allow a sound evaluation of this hypothesis.

Rincón 2 Shipwreck

The second shipwreck found in the area was thought by its discoverers to be *Santa María de Jesús*, a Spanish ship indicated by Robert Marx as lost one league from San Juan harbor in 1550.[5] The lead ingots appear to be similar to those found in Iberian and Dutch shipwrecks, dating from the late 16th and first half of the 17th centuries. The ship remains are covered with several feet of sand. Its purported position was indicated to us by one of the divers that participated in the 1970's salvage operations. A substantial part of the hull is said to be preserved under a ballast pile.

Rincón 3 Shipwreck

Lead ingots were also salvaged from this shipwreck in the 1970s, having engraved the words "Panther" and "Bristol". The salvors believed this site to be a late 18th-century ship named *Panther of Bristol*, but the ingots are typical of late 19th or early 20th-century shipwrecks.

The site of the shipwreck was indicated to us by members of the diving club Taíno Divers, and is a regular diving destination today, protected by a growing coral reef and the watchful eye of the diving club staff. A pronounced magnetic anomaly in a deeper area nearby may be associated to this site, but was not visible in the side scan sonar, perhaps because it is also covered by the sediment eroded from the adjacent beach (fig. 3).

Figure 3: Juan Vera and Filipe Castro deploying magnetometer. Photo: Chris Cartellone.

Rincón 4 Shipwreck

We have very little information about this site, except that it is a wooden hull lying at a depth of around 30 m. A pronounced magnetic anomaly in the area may potentially be from an anchor. This site, like the others discussed, would require additional diver time to investigate and confirm.

Conclusion

The 2010 survey was a success in more than one way. We have established working relations with the discoverers of the Rincón 1 site – Richard Fitzgerald and Mikal Woods - and we were given access to old pictures and old stories that have enriched immensely our knowledge about this site. We left Rincón convinced that the shipwreck site was not destroyed by the salvors and that whatever remains is worth one or two excavation seasons. The people we met – divers, fishermen, local authorities and city managers – were all extremely cooperative, and share the same values we do: the underwater cultural heritage of the region belongs to the community and should not be destroyed, nor salvaged and sold by privates for their selfish gain.

In the end, the only problem pending is the coral reef near the site. It is a beautiful and healthy habitat that must not be endangered by an archaeological excavation and we are committed not to do it until we are absolutely sure that our intervention will not pose the slightest danger to the marine ecosystem of the region. The Rincón 1 site is stable and covered with more than 2 m of sediment, therefore protected from the elements and the curiosity of the divers. However, should the biologists with whom we are working determine that the shipwreck's excavation does not pose a risk for the environment, we are extremely interested in digging, recording, conserving, and publishing this shipwreck.

Acknowledgements

The authors thank Mikal Woods and Richard Fitzgerald, Texas A&M University Center for Maritime Archaeology and Conservation, Mr Charles Consolvo, the Institute of Nautical Archaeology, the *Instituto de Cultura Puertoriqueña*, the Alcaldia of Rincón, Taino Divers, Mr Miguel Págan, and our indefatigable skipper Freddy González Martínez.

Notes

1. Gustavo García, "The Rincón Astrolabe Shipwreck," M.A. dissertation (Texas A&M University, College Station, 2005).
2. R. Ollard, *Man of War. Sir Robert Holmes and the Restoration Navy* (London: Hodder & Stoughton, 1969), 125.
3. Ibid., 49.
4. H. Cotterell, *Old Pewter, its Makers and Marks in England, Scotland, and Ireland; an Account of the Old Pewterer & his Craft* (Rutland, Vermont: C.E. Tuttle Co., 1963), 40 and 247.
5. R. Marx, *Shipwrecks in the Americas* (New York: Dover Publications,1987), 400.

References

Cotterell, H. *Old Pewter, its Makers and Marks in England, Scotland, and Ireland; an Account of the Old Pewterer & his Craft*. Rutland, Vermont: C.E. Tuttle Co., 1963.

Ollard, R. *Man of War. Sir Robert Holmes and the Restoration Navy*. London: Hodder & Stoughton, 1969.

Pilkey, O. H. and S. J. Fritz. *A Marine Atlas of Puerto Rico*. San German, 1976.

HMS *Solebay* Lost and Found in Nevis, West Indies

Chris Cartellone
Center for Maritime Archaeology and Conservation, Texas A&M University

On 25 January 1782, during the Battle of Frigate Bay, HMS *Solebay* wrecked in shallow waters off the southwest coast of Nevis in the Lesser Antilles. Captain Charles Holmes Everitt scuttled the wreck by detonating 160 barrels of gunpowder to prevent capture to the pursuant French. On 26 March 2010 a team from the Nevis Historical and Conservation Society (NHCS), the Nevis Air and Seaport Authority (NASPA), and Envision Mapping UK Ltd. discovered what appears to be remains of the *Solebay* shipwreck. In June 2010 Chris Cartellone, PhD student in the Nautical Archaeology Program at Texas A&M University, conducted a pre-disturbance investigation to assess the wreckage and recommend plans for future studies.

From 16 to 22 July Cartellone visited Nevis to assess logistical concerns for a broad maritime archaeological survey. He met with Evelyn Henville, Executive Director of NHCS, and spent most of the time on island with Paul Diamond of the Interim Nevis Marine Heritage Management Group and NHCS. While there Cartellone and Diamond had the opportunity to snorkel and scuba dive four times on the *Solebay* site. On the last day they were assisted by a biological survey field school from Finger Lakes Community College, New York, under the direction of Professor James Hewlett (fig. 1). Despite limited time on Nevis and inclement weather, the results proved fruitful. On the last dive of the last day the team recorded five guns, ballast, and an anchor.

Given the time constraints, efforts to record the site progressed rapidly and were only interrupted on the weekend by stormy seas. Cartellone did initial towboard searches behind the NASPA patrol craft in an expanding circular pattern to visually delineate the site and identify key artifacts. His initial observations recognized an extensive debris field and the need for more time than allowable. He decided to record as time permitted so that a preliminary evaluation would be possible.

To do begin recording, the team used scuba to extended temporary baselines stretched between sand filled water jugs. Cartellone then conducted compass searches to locate artifacts further away. In the interim between the first dives and last day, while ashore, Cartellone briefed the Finger Lakes biology team on underwater archaeology and trilateration recording techniques. The students quickly grasped the concepts by practicing their skills recording lounge chairs on the beach to simulate guns.

Figure 1: Student Conor O'Leary, Professor James Hewlett, Chris Cartellone. Photo: Paul Diamond.

Once at sea with the entire Finger Lakes biology team, Cartellone provided a last briefing, then they swam off to document direct measurements of the guns, trilaterated distance between the guns, and measured distances along the baselines between distant guns and the anchor. On the same dive, Cartellone photographed the site with a digital camera. He achieved this with limited success, battling a surge and limited visibility from a previous weekend storm. This handful of measurements provided enough data to produce a basic site map and make some assessments.

The site is located about a mile offshore in twenty-one feet (6.4 meters) of water. The location is on the southwest, leeward side of the island, relatively protected from large Atlantic waves that batter the eastern seacoast. The study recorded artifacts spread across approximately 160 feet (50 meters) length in a consistent depth. It should be noted that several different guns were observed by the original finding team than were observed on this visit. The broad area has limited coral growth mostly attached to the artifacts. The guns are largely settled on the bottom surface, rather than buried into it, with partial burials from sand and coral deposited along the sides of the artifacts. All guns appear concreted. The guns and artifacts during the initial discovery warrant further investigation and mapping. Much of the wreck likely did not survive the scuttling explosion. The bottom appears hard in the area examined with outlying pockets of sand. This hard seafloor prevented the rapid burial of organic materials, providing shipworms ample opportunity to destroy timbers. However, an 1808 Arrowsmith map marks its location by name with surprising accuracy and allowed for its initial discovery. This may indicate that enough of the wreck remained twenty-six years after sinking to enable its documentation, possibly as a navigation hazard.

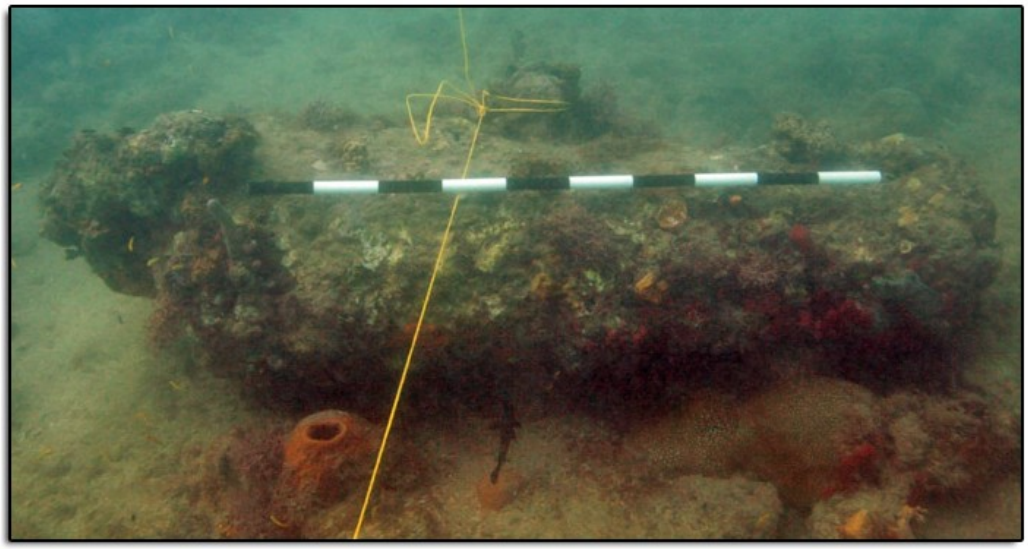

Figure 2: Gun C - Carronade, muzzle to right. Photo: Chris Cartellone.

The data thus far supports the identity of the site as *Solebay*. The guns' measurements, after accounting for concretions, accord with those of a sixth-rate, 28-gun, 9-pounder British frigate of the 1760 *Mermaid* Class. Royal Navy 9-pounder long guns of this period are 7 to 9 feet (2.13 to 2.74 meters) in length. The recorded guns all measured 8.2 feet (2.5 meters). The one exception among the five recorded guns was Gun C (fig. 2). Its shape and dimensions correlate with a carronade. The gun lacked any observable trunnions and has what appears as a concreted elevation screw. Since *Solebay* sank in 1782, it likely carried both types during this transition period when the Royal Navy was adopting newly-invented carronades. The anchor and ballast complement the identification, yet further study is needed.

Solebay grounded and was scuttled without any loss of life according to historical records and it should not be considered a war grave. Its historical significance certainly warrants further documentation. *Solebay* participated in the ill-fated British endeavor to relieve General Charles Cornwallis' army at the Battle of Yorktown in 1781. In addition to its role in the American Revolution and subsequent conflict between the British and French, *Solebay* represents importance to naval history. It is an example of a sixth-rate frigate from the late eighteenth century and Gun C possibly represents one of the earliest examples of a carronade in Royal Naval service.

While in Nevis, Cartellone visited with Dan Carruthers of the British High Commission, Eastern Caribbean, who had flown in from Barbados specifically motivated by the find. He visited with Nevis government representatives to appeal for protection of the wreck. The British government, as represented by Carruthers, fully supports the research efforts and documentation as an aid to preservation of its maritime heritage. The site also represents a strong initial case for establishing site protection strategies and laws in Nevis, since the Federation of Saint Kitts and Nevis ratified the UNESCO Convention on the Protection of the Underwater Cultural Heritage in December 2009.

This project represents what can be accomplished by coordinating limited resources to carry out research in underwater archaeology. Because of Diamond's relationship with the NHCS, he was aware of Professor Hewlett's overlapping marine biology field school and suggested soliciting help documenting the wreck. The team accomplished what otherwise would have been impossible due to the constraints of time and poor weather. The site now has a baseline survey, and the marine biology students received a broader, cross-discipline education. (fig. 3) This relationship may be similar to a career in a marine sanctuary with biologists and archaeologists working closely together. The author is actively soliciting funding for a broad maritime survey of Nevis in 2011 with the intention of thoroughly delineating and documenting *Solebay* as the first record of the survey. Cartellone recommends in situ preservation and assisting the Nevis government to build a comprehensive layer of site protection strategies. In addition to laws and policing, mitigation efforts will be directed toward local education through the NHCS, NASPA, Scuba Safaris, and both the Nevis and British governments per UNESCO guidelines.

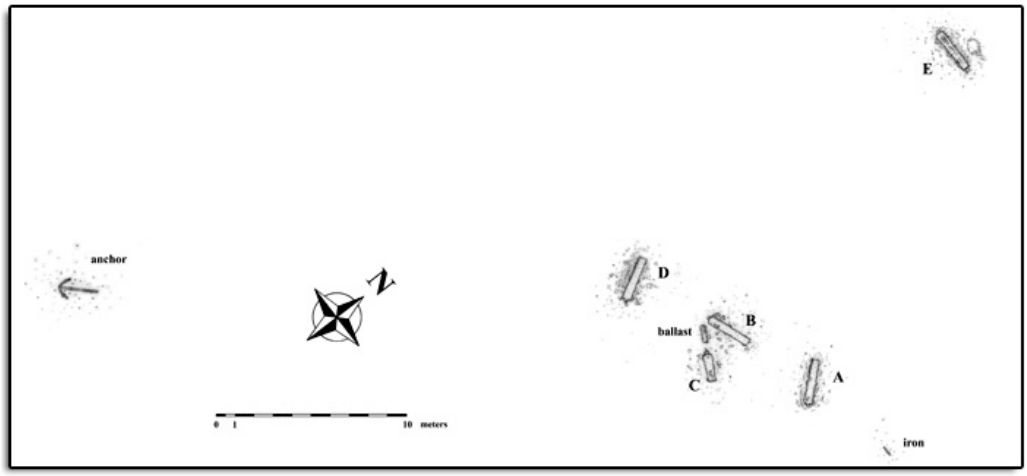

Figure 3: 2010 *Solebay* Site Map. Drawing: Chris Cartellone.

Acknowledgements

The author thanks Dr. Donny L. Hamilton of the Center for Maritime Archaeology and Conservation, Texas A&M University for providing the airfare that made this research possible. A deep gratitude is owed to Diamond of the NHCS for providing transportation, local networking, supplies, and his own sweat and blood, literally. Spencer Hanley, General Manager of the NASPA, and his crew made the first few days of diving possible by their generous time and use of the police launch. Arthur "Brother" Anslyn facilitated this relationship. Suzanne Gordon located a wonderful house for accommodations. Specifically, Arpad and Judith Kovacsy's home fostered the project by eliminating what is normally a significant cost. Ellis Chaderton, owner of Scuba Safaris, provided air, tanks, scuba equipment, and a dive boat with an excellent crew. Given my limited time compounded by poor weather, this season's success is greatly owed to James Hewlett and his team from Finger Lakes Community College. They shifted from marine biology to nautical archaeology with alacrity and aplomb to accomplish what otherwise would not have been possible. Finally, thanks to Justin Parkoff for adeptly helping with the digitization of looking site map.

Suggested Readings

Hubbard, Vincent K. *Swords, Ships, & Sugar: History of Nevis*. Corvallis, Oregon: Premiere Editions International, 2002.

Lavery, Brian. *Nelson's Navy: The Ships, Men, and Organisation, 1793-1815*. Annapolis: Naval Institute Press, 1989.

Lyon, David. *The Sailing Navy List: All the Ships of the Royal Navy--Built, Purchased and Captured--1688-1860*. London: Conway Maritime Press, 1993.

The *Warwick* Project: First Season Excavations

Piotr Bojakowski
Center for Maritime Archaeology and Conservation, Texas A&M University

Katie Custer Bojakowski
Center for Maritime Archaeology and Conservation, Texas A&M University

On 20 October 1619, the magazine ship belonging to the second Earl of Warwick, Sir Robert Rich, and known simply as the *Warwick*, made a scheduled stop in Bermuda while en route to Jamestown, Virginia. After completing the first stretch of the voyage it had to re-provision, discharge some cargo and passengers, and load valuable products bound for England. At the end of November, as the *Warwick* was preparing to depart for America, where the Jamestown settlers were no doubt eagerly awaiting the arrival of the ship and the supplies it carried, a devastating hurricane struck the Islands of Bermuda. Due to a combination of powerful north-westerly winds, shallow reefs, and sharp limestone cliffs surrounding the anchorage in Castle Harbour, nothing could be done to save the ship (fig. 1). The *Warwick's* hull, although sturdy, was no match against the harder reefs and rocks and its fate was sealed.[1]

Figure 1: 17th-century map of Bermuda showing Castle Harbour. Image courtesy of NMB.

Between June 19 and July 23, 2010, CMAC in association with the Institute of Nautical Archaeology (INA), the National Museum of Bermuda (NMB), and the National Geographic Society (NGS) conducted the first field season of excavation of the galleon *Warwick*. The project staff included Piotr Bojakowski and Katie Custer Bojakowski, primary investigators; Dr. Kevin Crisman; Dr. Jonathan Adams; Nautical Archaeology Program (NAP) graduate students Carlos Cabrera, John Eastlund, Mike Gilbart, and Doug Inglis; as well as numerous volunteers (fig. 2).

Figure 2: Piotr Bojakowski examining the planking.

During the 2010 field season, a portion of the starboard side of the *Warwick* was excavated and recorded (fig. 3). The exposed elements comprised 29 framing timbers representing the floor timbers as well as the first, second, and third futtocks. Although the framing showed distinct overlapping between the futtocks, the arrangement was loose and the timbers did not appear to be horizontally fastened to each other. During the excavation it was noted that the framing of the *Warwick* corresponded to the English three-arc system that dictated hull form during the early 16th through the 17th centuries (fig. 4).

The second elements uncovered were ceiling planks which included three stringers that were considerably more robust than the other ceiling. The uppermost stringer also served as a shelf clamp on which the lodging knees and two types of deck beams were placed. The arrangement of large knees, beams, and ledges produced a sturdy support for the deck, which based on the evidence from the 1979 report was covered with 50mm thick planks.[2] The archaeological evidence suggests that this deck structure was the first deck or the orlop deck and most likely would have been used as the gundeck.[3] The 15 outer planks constituted the first layer of external planking. Two of the upper planks were significantly narrower and thicker and have been identified as the ship's wales. The second layer of external planking, the doubling, was only visible at the aft most end of the stern section. Furthermore, there was direct evidence of a third layer of planking, or perhaps wooden sacrificial sheathing.

Figure 3. Kevin Crisman and Leah Crisman preparing for a dive.

Figure 3: Jonathan Adams taking notes on the framing timbers and ceiling planks.

In spite of the fact that the *Warwick* sank 10 years after another English ship wrecked on Bermuda, (the *Sea Venture* of 1609), and could otherwise be considered an early 17th-century find, preliminary observations reveal little structural resemblance between the two vessels. *Warwick*, like *Sea Venture* is estimated to have been about 300 tons, but appears more robustly timbered inside and out. Although the evidence is limited and the corresponding structures of both of vessels cannot be readily compared, the nuances of the *Warwick's* construction seem to deviate for what is currently known about early 17th-century English shipbuilding. Curiously, the structure of the *Warwick* appears to be more akin to what was observed on *Mary Rose*, a warship lost 74 years earlier.[4] The possibility that *Warwick* wasbuilt in the late 16th century would provide insight into the actual construction of English ships in comparison to the contemporary treatises on ship design and construction. Additionally, the continuing excavation and analysis of the *Warwick* in the context of the *Mary Rose*, the 'Gresham Ship,'[5] and the *Sea Venture*, among others will enable us to study the characteristics of a number of new and unique structural features from the keel to the upperworks; while at the same time seeing the evolution of English shipbuilding traditions from the late 16th to the early 17th centuries. As a ship that was sailing from England, via Bermuda, to Jamestown, Virginia; the *Warwick* might also shed light on the cargo, personal possession of passengers and crew, and a multitude of other items that were shipped to the colonies in the year of 1619.

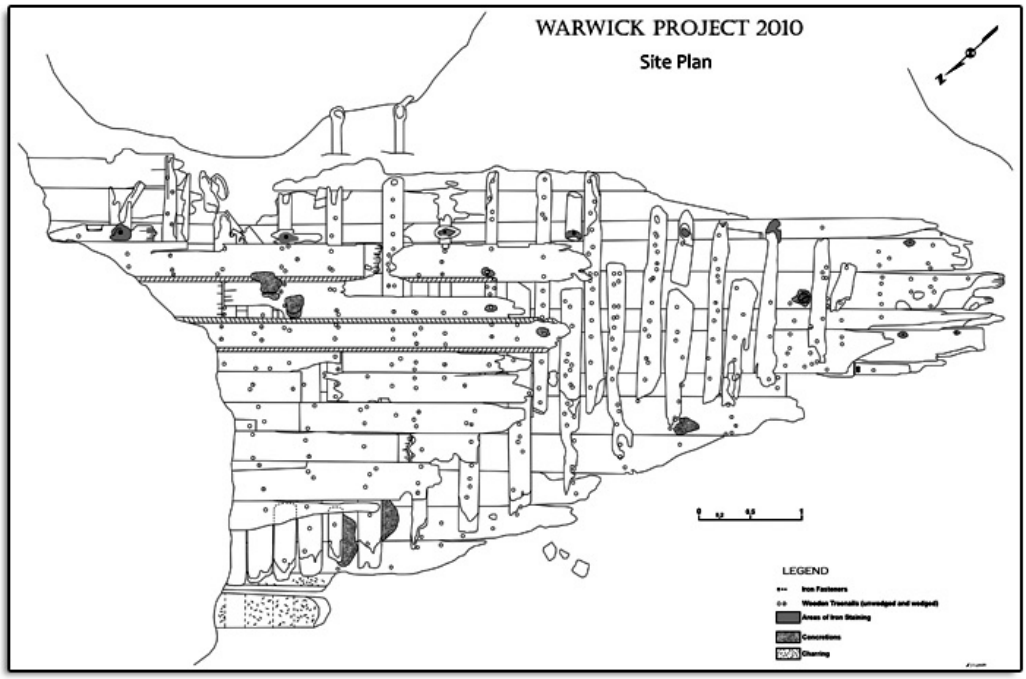

Figure 4: Site plan based on 2010 excavation.

Notes

1. E. Tracey and T. Tucker, 1979, "Excavation of the Warwick," Internal Report. Bermuda: Bermuda Maritime Museum.

2. Ibid.

3. Jonathan Adams, Personal communication with author.

4. Adams, J., *Ships Innovation & Change: Aspects of Carvel Shipbuilding in Northern Europe 1450-1850*, Stockholm, Studies in Archaeology 24 (Stockholm Marine Archaeology Reports 3, Stockholm, 2003), 123; Adams, Personal communication.

5. J. Auer and A. Firth, "The '*Gresham Ship*': an interim report on a 16th-century wreck from Princes Channel, Thames Estuary," *Post-Medieval Archaeology* 41:2 (2007): 222–241.

References

Adams, J. Personal communication with author.

Adams, J. *Ships Innovation & Change: Aspects of Carvel Shipbuilding in Northern Europe 1450-1850*. Stockholm, Studies in Archaeology 24. Stockholm Marine Archaeology Reports 3, Stockholm, 2003.

Auer, J. and A. Firth. "The 'Gresham Ship': an interim report on a 16th-century wreck from Princes Channel, Thames Estuary." *Post-Medieval Archaeology* 41:2 (2007): 222–241.

Tracey, E. and T. Tucker. 1979. "Excavation of the Warwick." Internal Report. Bermuda: Bermuda Maritime Museum.

The Cais do Sodré Ship: A 16th-Century Shipwreck on the Tagus River, Lisbon, Portugal

Kotaro Yamafune
Center for Maritime Archaeology and Conservation, Texas A&M University
Filipe Castro
Center for Maritime Archaeology and Conservation, Texas A&M University

This shipwreck was found in April 1995, at a depth of around 6.5 m, during the excavation for a new subway station near downtown Lisbon, in Portugal. It has been dated to around 1500, when the city's waterfront was 120 m away from the place where it was found. The orientation of a breast hook and the position of part of a whipstaff suggest that the ship's bow pointed north, in the direction of the 16th century sandy beach. Fragments of 37 frames were preserved over an area 24 m long and almost 5 m wide. Hull and ceiling planking were preserved along with two stringers, one apron, part of the keelson, one breast hook, one orlop beam, one maststep buttress, one fragment of a stanchion, and part of a whipstaff (fig. 1).

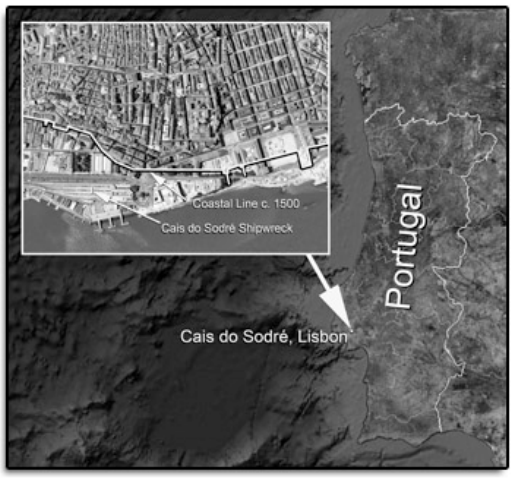

Figure 1: Location. Drawing: F. Castro - pictuers from Google Maps.

The excavation was entrusted to Instituto Português do Património Arquitectónico e Arqueológico (IPPAR) archaeologist Paulo Jorge Rodrigues. The preliminary results of his project were presented at a 1998 conference on Iberian ships held in Lisbon. Two Texas A&M University field schools organized in Lisbon in the summers of 2001 and 2002 resulted in the complete recording of the ship's floor timbers at 1:1 and 1:10 scales. In 2002 Paulo Jorge Rodrigues finished his *maîtrise* at Sorbonne I University under the supervision of Dr. Eric Rieth. The Texas A&M field schools in Lisbon were halted that year, and Paulo Rodrigues' poor health and his eventual leave from Instituto Português de Arqueologia (IPA, the institution entrusted with the conservation and curation of the ship's hull remains), slowed the project until it stopped with Paulo's untimely death in November 2008. In March 2010 CMAC obtained permission to continue Rodrigues' work and honor his memory by publishing the Cais do Sodré shipwreck. The first phase of CMAC's research project consisted of organizing, analyzing and publishing the primary data, while the second phase proposes an interpretation of the original research (fig. 2).

This shipwreck is especially interesting because of the construction marks inscribed on its floor timbers. As it happens with other Portuguese shipwrecks from this period – namely Aveiro A, the Pepper Wreck and Arade 1 – the central floor timbers of the Cais do Sodré shipwreck have a number of special characteristics and construction marks engraved that suggest the application of a well-known construction method, described in contemporary texts. These characteristics and marks consisted of:

- Two spikes inserted in recesses cut on the aft face of the forward timbers, and fore face of the aft timbers, connecting them to the keel;
- Dovetail scarves and three iron spikes in the connections of the floor timbers with the first futtocks;
  A number expressed in Roman numerals, from "I" to "XVIII" in sequence, starting from a central, now—missing master frame whose number would be "0";
- Two vertical lines marking the foot of the floor timber, where it sits on the keel;
- One or two horizontal lines that may have marked the base of the mold from which all floor timbers seem to have been cut; and
- One or two vertical marks near the turn of the bilge arc, to the outside of the horizontal line, whose significance is not clear at this point.

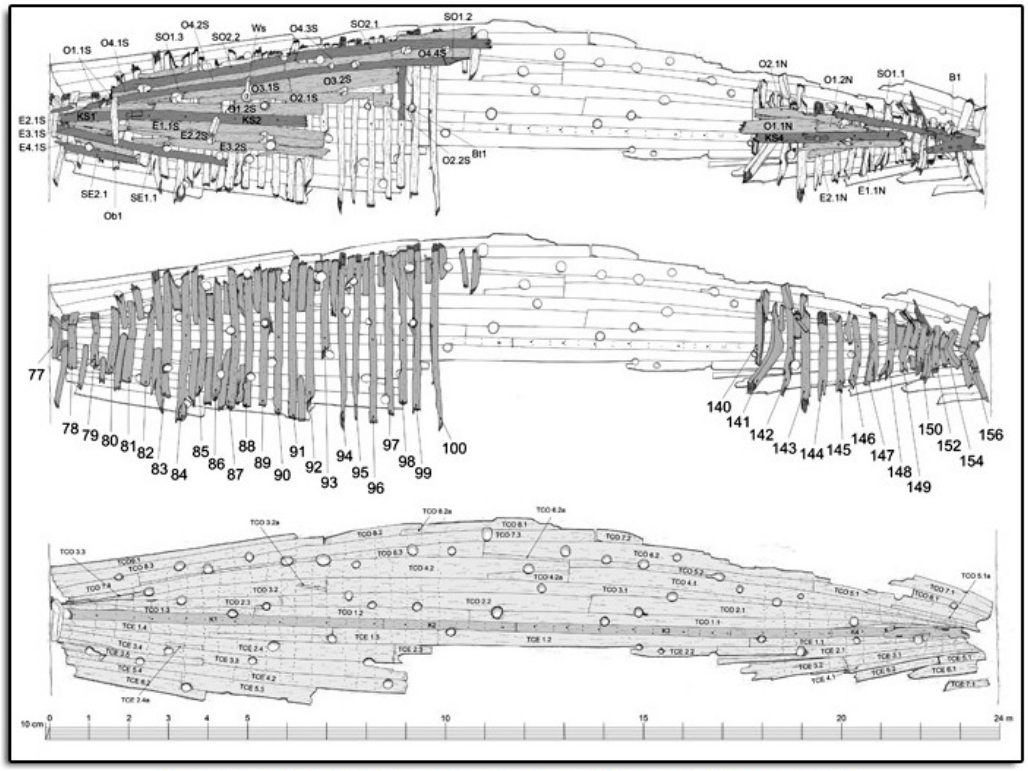

Figure 2: Cais do Sodré hull remains. Drawings: F. Castro and K. Yamafune, 2010.

Fore and aft of the 37 central frames, "V" and "Y-shaped" floor timbers, named *enchimentos* in Portuguese, were fastened to the keel with a single iron spike, were not numbered, and did not have the horizontal and vertical marks. However, *enchimentos* numbers 80, 82, 83, 85, 150 and 152 showed evidence of vestigial diagonal lines that may be related to the construction process. Timbers C78 and C81 had one arm scarfed into their lower section, presumably for lack of suitable "Y-shaped" timbers.

Since archaeologists were not present at the time of the wreck's discovery, and the bulldozer operator did not immediately realize the importance of this find, a number of central frames were destroyed. Fastening holes on the keel indicate these positions and permitted a reconstruction of the total number of frames, as well as the determination of the in room and space.

The study of the Cais do Sodré hull and its construction marks has just begun and at this time looks rather puzzling to us (fig. 3). The scantlings seem light for an oceangoing ship. With over 24 m of keel length, the absence of keel scarfs has no known parallels in this type of ship; the pronounced outward kinks at the bow and stern frames make it difficult to imagine the depth of hold; and the presence of a whipstaff suggests a ship with more than one deck.

It is difficult to theorize about the site formation process because the upper portion of the frames and planking were destroyed by the construction equipment, as well as the mast step arrangement and whatever bulkheads or other structures remained. The lack of a substantial amount of ballast suggests that it was a derelict, but the depth at which it was abandoned seems too far away from the low-tide beach line.
We have plotted two of the lines defined by the marks on the frames, and got a fair curve, but no clear units of contemporary measure (neither *dedos*, *palmos de vara* or *de goa*, nor *codos castellanos* or *cantabricos*) seem to fit the model. Further study may allow us to extract more information from this shipwreck.

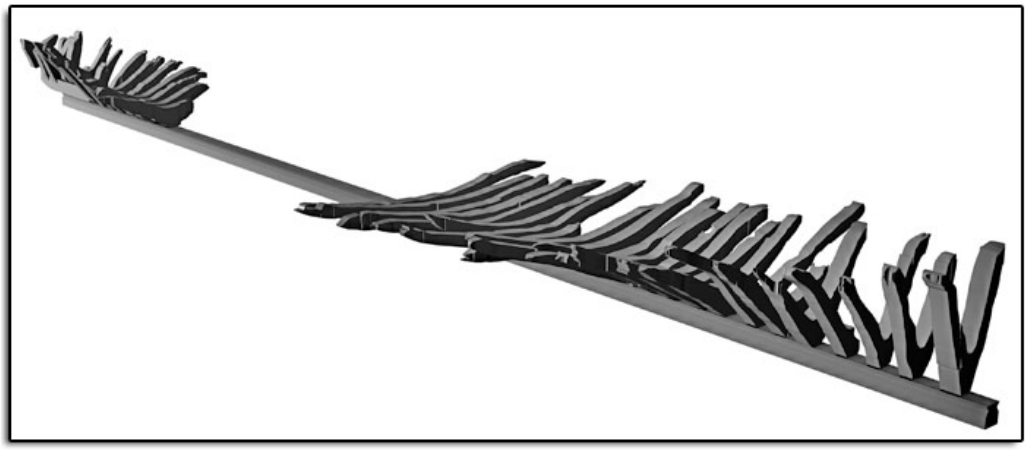

Figure 3. Tridimensional model of the ship's frames mounted on a straight keel. Render: T. Terryberry.

Acknowledgements

The authors and the team studying this shipwreck – Coral Eginton, Thomas Derryberry, Mauro Bondioli and Mariangela Nicolardi – wish to thank the Portuguese Instituto de Gestão do Património Arquitectónico e Arqueológico (IGESPAR), especially its Divisão de Arqueologia Náutica e Subaquática (DANS) for their immense help in reconstructing the hull plans, namely DANS' head Francisco Alves, and his team Pedro Neves de Oliveira, João Coelho, and Miguel Aleluia. This study would have been impossible without them.

References

Alves, Filipe. and E. Rieth. *Diving into History: The 15th Century Ship Ria de Aveiro A*. Ilhavo: Museu Maritimo de Ilhavo, 2004.

Castro, Filipe. "Relatório dos trabalhos de registo arqueográfico das madeiras do navio do Cais do Sodré, Verão de 2001." On file in IPA/CNANS' library, 2001.

Castro, Filipe. "The Cais do Sodré Ship Frames – 2002 Field Season – ShipLab Report 4." On file in IPA/CNANS' library, 2002, and in Nautical Archaeological Program Library, Texas A&M University, 2002.

Castro, Filipe. "Archaeology and Dredges: the Arade River Archaeological Complex." *International Journal of Nautical Archaeology* 34.1 (2005): 72-83.

Castro, Filipe and Kotaro Yamafune. "The Cais do Sodré Ship – ShipLab Report 13." On file in IGESPAR/DANS' library, 2010, and in Nautical Archaeological Program Library, Texas A&M University, 2010.

Loureiro, V. and J. G. Alves. "The Arade 1 Shipwreck: Preliminary Results of the 2004 and 2005 Field Seasons." *International Journal of Nautical Archaeology* 37.2 (2008): 273-282.

Rodrigues, P. "Étude de la charpente transversale du navire de Cais do Sodré de la 2ème moitié du XVe siècle/début du XVIe." Thèse de Maîtrise, Université de Paris I - Sorbonne, 2002.

Rodrigues, P. "Relatório Preliminar dos trabalhos de desobstrução e registo arqueográfico dos restos do navio encontrado no Cais do Sodré, nas obras do Metropolitano de Lisboa." Lisboa: I.P.P.A.R., 1995.

Excavating a Phoenician Shipwreck at Bajo de la Campana, Spain

Mark E. Polzer
Institute of Nautical Archaeology

Lying just off shore from La Manga del Mar Menor, a popular tourist destination on Spain's famed Costa Calida, is a shallow reef known as Bajo de la Campana ("Shallows of the Bell"). It is a submerged rock outcrop that rises from the sea floor at a depth of about 18 meters to within a few meters of the surface. Lurking just below the waves, the reef has been a navigational hazard for millennia, as evinced by shipwreck material strewn across the seabed at the base of the rock. A survey of the site in 1972 and subsequent re-study in 1995 of the retrieved material by the National Museum and Research Center for Underwater Archaeology (now ARQVA) determined that there were at least three ancient shipwrecks along the seaward side of the reef. Materials from the three assemblages were dated and provenienced as 1st century A.D. Roman, 2nd century B.C. Punic/Roman, and 7th/6th century B.C. Phoenician.

Figure 1: Archaeologists excavate at the site of an Iron Age Phoenician shipwreck, at the base of Bajo de la Campana. Photo: Patrick Baker.

Since 2007, the Institute of Nautical Archaeology (INA) at Texas A&M University and an international team of archaeologists and students from the Nautical Archaeology Program have been investigating the site (fig. 1). The project is conducted in collaboration with ARQVA, and has received logistical and financial support from INA directors and friends, CMAC, the National Geographic Society, the Spain-USA Foundation, and the Program for Cultural Cooperation Between Spain's Ministry of Culture & United States Universities. The project's primary target of study is the Phoenician shipwreck, the first ever to be systematically excavated and studied. Work began in 2007 with a survey of the area to relocate the wreck site and determine if there was sufficient material remaining to justify a full-scale excavation. Based on the striking amount and diversity of material recorded by the survey, excavation was begun the following year.

Three field seasons to date have recovered scattered remains from a heterogeneous cargo of raw materials and manufactured goods, as well as from shipboard items and equipment (fig. 2). One of the ship's main consignments was a load of elephant ivory, of which the team so far has retrieved 54 tusks and fragments of numerous others. Seven specimens bear Phoenician inscriptions, which include several Phoenician/Punic anthroponyms. Other raw materials include galena, a silver-bearing lead sulfide mineral that was used in the cupellation process to extract silver from its ore; ingots of smelted tin and copper; earthen material, possibly potting clay or mineral pigment; timber, pitch, and amber. The ship carried a variety of pottery, including transport amphoras, tripod bowls/mortaria, carenated bowls, plates, cups, and juglets, as well as wooden combs incised with linear decoration and a number of luxury items. The latter consist of a fluted, limestone pedestal with scroll capital; an elegant ivory knife-handle; a hollow bronze piece cast in the shape of a human forearm clutching what appears to be a stylized lotus blossom or palmette; bronze legs and corner pieces of a bed or couch; bronze legs for a small chair, stool, or stand; and perfumed oil, the assumed content of several small, globular jars.

Figure 2: Some of the finds from the Phoenician shipwreck: (clockwise from upper left) raw elephant tusks, amber, two small unguentaria, bronze furniture elements, and tin ingots. Photos: Patrick Baker and Mark Polzer.

The 8th–6th centuries B.C. witnessed one of the seminal enterprises of the early 1st millennium, in which Phoenicians—largely from the city of Tyre—established trading posts and colonies across the full extent of the Mediterranean and beyond, even along Atlantic shores. Scholars almost unanimously explain this undertaking as a search for the raw materials—especially silver—that the Phoenician cities of the Levant needed to satisfy onerous tributary demands imposed upon them by the Neo-Assyrian Empire. The truth is perhaps more nuanced, with a variety of additional factors—land restrictions, overpopulation, food shortages, the search for new supplies and markets for their goods, economic opportunities, etc.—providing inducements at different times and to varying degrees throughout this period. Accordingly, the state (palace and temple) and private commercial interests likely played both complementary and competitive roles in this process, depending on the particular initiative, colony, or region. Furthermore, archaeology has shown that the Phoenicians typically settled in resource-rich areas where an existing population was established and thriving. Material remains from indigenous settlements and necropolises excavated in Spain and elsewhere across the region testify to the profound, so-called orientalizing, effect that Phoenician intervention had on local populations. The successful socio-economic strategy of the colonists was to create a strong demand among the elites of these societies for eastern exotica and luxury craftworks, which they exchanged advantageously for plentiful silver, gold, copper, tin, iron, agricultural produce, and other materials.

Preliminary study of some of the ship's cargo is yielding clues to the vessel's possible port of origin and intended destination. Examination of the ceramic fabrics suggests that at least some of the wares were produced by colonial workshops along the southern coast of Andalusia, in the vicinity of the Phoenician emporium of Malaka (modern Málaga) (fig. 3). It is quite possible that all of the various cargo goods were shipped separately to Malaka—the ivory from Lixus (Atlantic Morocco), tin from Galicia (Atlantic coast of northern Spain), amber from the Baltic region of northern Europe, and wine, olive oil, or fish products in amphoras from Gadir (modern Cádiz)—and then taken onboard the vessel for trans-shipment with locally produced pottery and galena. Their destination may well have been the Phoenician colony of La Fonteta, located less than 45 kilometers up the coast from Bajo de la Campana, near Alicante, at the mouth of the Segura river. Excavation at the site has produced evidence for a vibrant metallurgical industry, and work nearby has revealed that Phoenicians from the colony established pottery and jewelry workshops in neighboring local townships during the 7th century B.C. The Bajo de la Campana ship may have been bringing raw metals and other provisions for the colony's workshops and, potentially, clay for the nearby potteries. The luxuries were likely destined for the ruling class of the indigenous communities of the region in exchange for favor and influence over the local labor force and access to the mining and agricultural output from the surrounding hinterlands that they controlled; or perhaps for those products directly.

Phoenician trade, colonization, and acculturation of indigenous Iberian societies reached their apex at the end of the 7th century B.C., at the very time that the Bajo de la Campana ship met its unfortunate fate. The shipwreck's location and orientation indicate that it was very likely heading to La Fonteta, at least as its immediate destination. The metal products, ores, and pottery all point to Malaka or its environs as the vessel's point of origin. The city was an important port of trade, through which goods of all sorts from the Atlantic, North Africa, Spain, and Mediterranean locales farther east could be found. Material excavated from the ship's cargo is diverse in both type and source, and should profit understanding of the extensive Phoenician trade networks in the western and central Mediterranean. Investigation of this important shipwreck may ultimately determine the nature and purpose of the trading venture upon which the vessel was embarked. Of particular interest is what this might reveal about Phoenician commercial activity and organization in southeastern Spain and how Phoenician colonists interacted

with their indigenous partners in this resource-driven venture.

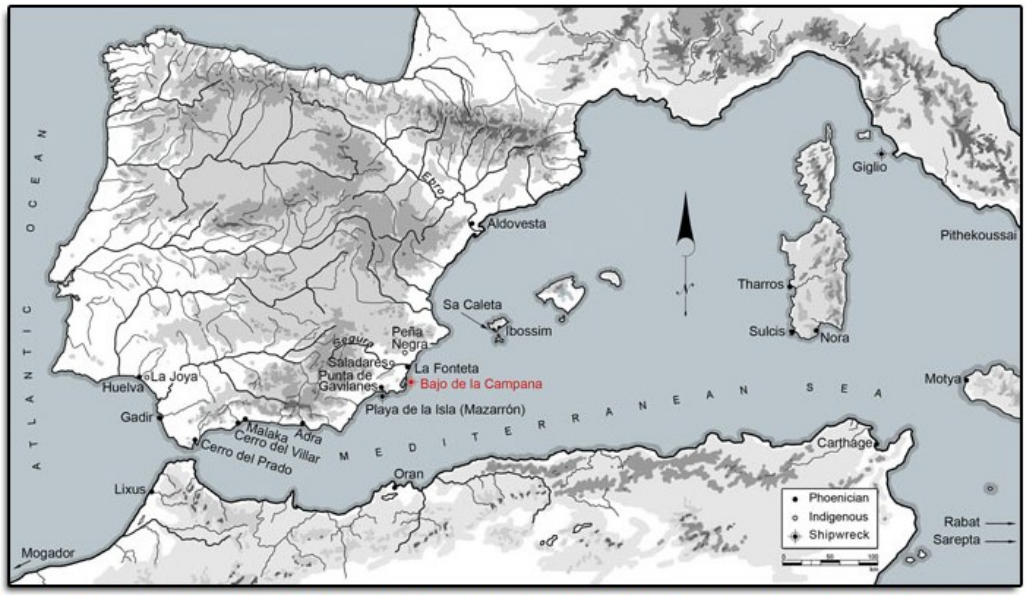

Figure 3: Phoenician colonies in the western Mediterranean and the location of the Bajo de la Campana shipwreck. Map: Mark Polzer.

Virtual Archaeology: Documenting Deepwater Cultural Resources

Meko Kofahl
Texas A&M University

Bob Ballard and his team have been plying the Mediterranean for years, exploring the ocean bottom and conducting surveys. Due to the relationship Texas A&M University's Nautical Archaeology Program has with this team, I was given an opportunity to participate on one of the legs of this year's summer cruise (fig. 1). I assisted with data processing, logged SONAR targets and generally just experienced life aboard a research vessel. Because my own research interests lie with the imaging, documentation and preservation of deepwater shipwrecks, this opportunity put me at ground zero for work in this area.

Figure 1: Meko Kofahl enroute to rendezvous with *Nautilus*.

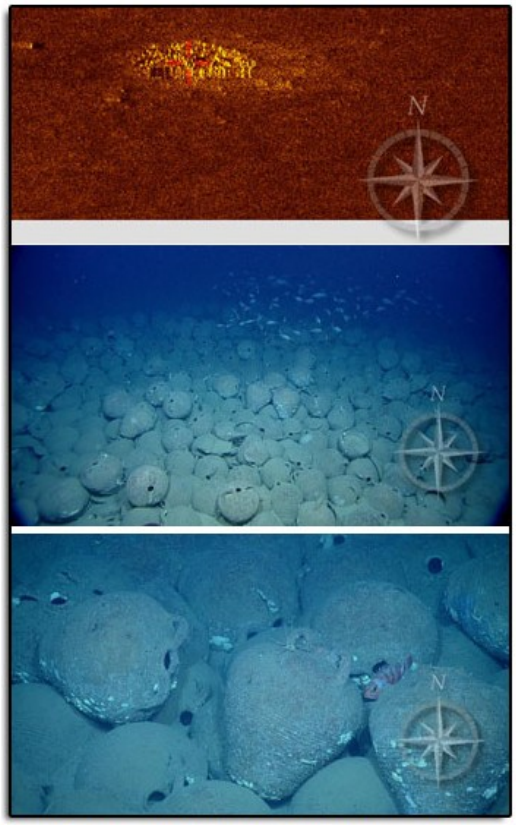

Figure 2. The amphorae-laden shipwreck as it appears on SONAR (top). Photographs of the amphorae (middle). Close-up (bottom). All images courtesty of the Institute for Exploration / Ocean Exploration Trust.

Using a SONAR towfish, we spent approximately a third of the cruise time documenting the seafloor and logging anomalies, or 'targets' (fig. 2). On closer inspection these included everything from trawler dump sites to natural rock formations to amphora piles – we logged dozens of such targets. What we found universally with all sites was depressing: modern trash littered every site we inspected, natural or archaeological. Objects as small as 55-gallon drums show up on the SONAR we used, and more than once we visited garbage piles.

The last target we visited on my leg of the cruise, the Knidos J site, turned out to be both tragic and exciting. It was clearly an amphora-laden shipwreck, but showed apparent trawler damage which had scattered a number of the amphorae and scarred the seafloor (fig. 3). The damage extended to the shipwreck itself and exposed a series of wooden ship frames. If this is an ancient ship, irreversible damage has been done to a significant portion of intact hull. Because objects below the surface of the seafloor do not show up on SONAR, the bittersweet aspect of this find is the fact that the trawler scar has made the hull visible. Unfortunately, this exposure now puts it at risk for further destruction.

Before this wreck completely disintegrates or is consumed by teredo worms, I hope to return and conduct additional close-up imaging and a sub-bottom profile of the hull. Sub-bottom profiling technology allows us to see what lies beneath the seafloor, and has been used to great effect on the shallow river site of the 15th-century English ship, *Grace Dieu*, but is rarely conducted at non-diveable depths. There are a number of technical hurdles to overcome, but the potential rewards are considerable. Since this trawler-damaged site lacks obvious, unique artifacts which might warrant an expensive and difficult deepwater excavation, the only realistic alternative left to those of us interested in further understanding this and other buried hulls further is this kind of remote sensing.

I believe it is possible is to combine the existing technologies into a form of *virtual excavation*, a relatively economical process that can be employed anywhere a physical excavation is too expensive, too deep, or otherwise impossible. If we reproduce at depth the results seen with shallower surveys, it may be possible to discern site formation processes in addition to gathering some basic hull size and shape data from under the seafloor.

Figure 3: The Knidos J site, showing exposed frames. Image courtesy of the Institute for Exploration / Ocean Exploration Trust.

I am very interested in cultural resource management (CRM) of deepwater archaeological sites, but the technological costs of excavating such sites will likely be prohibitive for many years. What is possible today, however, is the synthesis of existing data to create a digital model. Such a model – combining sub-bottom work with above-seafloor data such as photos and SONAR -- will provide information to a deepwater archaeologist well beyond what is currently being gathered today.

Returning to the trawler-damaged hull and executing a successful survey of this type would go a long way toward confirming the idea that even deepwater sites can be actively managed, researched, and monitored beyond what is currently visible above the seafloor.

Suggested Readings

Ballard, Robert D. et al. "Iron Age Shipwrecks in Deep Water off Ashkelon, Israel." *American Journal of Archaeology* 106:2 (April, 2002): 151-168.

Mindel, David A. and Brian Bingham. "A High-Frequency, Narrow-Beam Sub Bottom Profiler for Archeological Applications." IEEE Marine Technology Society *Oceans '01* Proceedings. Hawaii: November 2001.

Plets, Ruth M.K. et al. "The Use of a High-Resolution 3-D Chirp Sub-Bottom Profiler for the Reconstruction of the Shallow Water Archaeological Site of the *Grace Dieu* (1439), River Hamble, UK." *Journal of Archaeological Science* 36 (2009): 408-18.

The Documentation of Two Byzantine Shipwrecks from Yenikapı, Istanbul

Rebecca Ingram
Texas A&M University

Michael Jones
Texas A&M University

Since 2004, the Istanbul Archaeology Museums have conducted a massive salvage excavation in the Yenikapı neighborhood of Istanbul, Turkey, in preparation for the construction of the trans-Bosporus Marmaray rail tunnel which, when completed, will connect the European and Asian sides of the city. Although finds at the site range in date from the Neolithic to Ottoman periods, perhaps the most significant discoveries are from the ancient Theodosian Harbor—one of the main harbors serving the Byzantine capital of Constantinople between the fourth and eleventh centuries AD.[1] Besides thousands of artifacts, harbor installations, and loose ship timbers and ships' equipment, Byzantine period finds at Yenikapı include at least 35 shipwrecks, most of which are in an excellent state of preservation; these shipwrecks represent the largest collection of early medieval vessels ever found in the Mediterranean at a single site. At the invitation of the Istanbul Archaeology Museums, Dr. Cemal Pulak, associate professor at Texas A&M University and Vice-President of the Institute of Nautical Archaeology, has directed the recording, dismantling, and study of eight of the Yenikapı shipwrecks since June 2005.[2] Four of the dismantled ships are now housed at the Institute of Nautical Archaeology's Bodrum Research Center, where they will be documented and conserved; after conservation, the ships will be reassembled and displayed in Istanbul.

Figure 1: INA archaeologist Sheila Matthews (center) directs the total station scanning of ninth-century shipwreck YK 14 in summer 2007. Photo: Michael Jones.

Rebecca Ingram and Michael Jones, Ph.D. candidates in Texas A&M University's Nautical Archaeology Program and members of Pulak's Yenikapı Project team since 2005, are researching two of the shipwrecks for their dissertations. Rebecca Ingram is studying wreck YK 11, a small merchant vessel of seventh-century AD date excavated in the summer and fall of 2008. YK 11, one of only a few ships at Yenikapı to exhibit mortise-and-tenon plank edge joinery, was likely a derelict which came to rest in the thick mud at the western extent of the harbor. Michael Jones' research concerns YK 14, a cargo ship dating to around AD 900 excavated in the spring and summer of 2007. YK 14 probably sank near the entrance channel to the harbor, perhaps in a storm, and was quickly covered by sand; the ship's lower hull planking was edge-joined using regularly spaced wooden dowels, while the surviving upper hull was built without edge joinery, a combination of techniques that appear to have been used in merchant ship construction into the eleventh century. Both vessels are extremely well preserved due to their quick burial in harbor sediments after sinking, which prevented their destruction by marine borers. The first season of post-excavation cataloging and documentation of YK 11 and YK 14 occurred in the summer of 2009, and both researchers resumed work in June 2010.

Extensive in-situ recording as well as detailed post-excavation documentation and analysis are necessary for fully understanding the hull construction and histories of these vessels. The in-situ documentation of each ship provided the foundation for all subsequent research. After each vessel was uncovered, its individual timbers were labeled and a photomosaic was made of the wreck. Then, INA staff archaeologist Sheila Matthews oversaw the mapping of the shipwrecks with a total station, which produced accurate XYZ coordinates for each ship timber before its removal (fig. 1); this step is vital for recording the original shape of the hull before dismantling. Matthews then imported the data into Rhinoceros 3-D Modeling Software for the creation of site plans as well as preliminary 3-D reconstructions of two ships from the site (YK 1 and YK 4).

After total station mapping, both YK 11 and YK 14 were dismantled, with the pieces packed in wooden crates lined with sponge for transport to INA's Bodrum Research Center. For the many large, intact timbers, some up to seven meters in length, purpose-built wooden molds were designed to preserve the timber's original shape during storage and transport (fig. 2).

Figure 2: Rebecca Ingram catalogues a hull plank from YK 11 at INA's Bodrum Research Center; the original curvature of the plank was preserved through the use of a purpose-built mold. Photo: Michael Jones.

The ongoing post-excavation documentation for YK 11 and YK 14 consists of photographing, cataloging, and drawing each of the hundreds of timbers from each shipwreck (fig. 3).[3] Individual hull components are drawn at 1:1 scale on clear plastic film, while significant surface detail which provides clues to how the vessel was built and used--such as tool marks, carpenter's guide lines and fastener holes--are drawn and photographed. The finished 1:1 drawings will be scanned and combined with total station data collected during the excavation to create a 3-D virtual reconstruction of each ship. These virtual reconstructions, along with the archaeological reports on these ships, will be the basis for later reassembly of the hull remains of both ships in Istanbul.

Although shipwrecks found in land excavations have sometimes been removed intact from the ground or cut into sections for removal,[4] Dr. Pulak decided to fully dismantle the eight shipwrecks under his direction for several reasons. First, it can be done without heavy equipment by a small crew of archaeologists, occasionally assisted by workers who help move the timber crates from the excavation area to water-filled timber storage tanks. Post-excavation cataloging of such large timbers is feasible within the storage tanks if the timber molds are designed to be removable: after unscrewing the molds from their crates, the buoyancy of the wooden molds allows most timbers to be raised out of the water by one or two researchers for cataloging and drawing.

Second, the dismantling process reveals many significant construction details, including the presence of edge fasteners, caulking, and hull repairs. This type of information is particularly important for excavating Byzantine-period Mediterranean ships. Between AD 300-1000, Mediterranean shipbuilders transitioned from using a shell-based construction method for building ships to more modern skeleton-based methods. In shell-based construction, a technique in use since the Late Bronze Age, the hull planking or shell of the ship is built prior to the addition of framing, typically by edge-joining the hull planks; in contrast, skeleton-based hulls are built with pre-erected frames which determine the shape of a vessel's hull before planking is added. The Yenikapı shipwrecks date to this transitional period; both YK 11 and YK 14 clearly derive from the shell-based construction tradition of shipbuilding, but show significant differences from earlier shell-based Mediterranean ships as well as from contemporaneous shipwrecks found elsewhere in the Mediterranean.

While it will likely take years to fully understand the technological, economic and social factors which determined the designs of the Yenikapı ships, it is clear that a variety of shipbuilding techniques were used in the

Figure 3: Michael Jones recording detailed measurements of a plank from YK 14. Photo: Rebecca Ingram.

that a variety of shipbuilding techniques were used in the Byzantine period. These techniques were refined over centuries of experimentation and ultimately resulted in skeleton-based shipbuilding. The study of YK 11 and YK 14 will add considerably to our knowledge of how and why this process occurred.

Acknowledgements

The authors would like to thank the Istanbul Archaeology Museums and the Republic of Turkey Ministry of Culture and Tourism for the opportunity to participate in the research on the Yenikapı ships. Support for this research has been provided by the Institute of Nautical Archaeology, the Center for Marine Archaeology and Conservation (CMAC) and the Nautical Archaeology Program at Texas A&M University, the American Research Institute in Turkey (ARIT), the American Philosophical Society, and the College of Liberal Arts, the Department of Anthropology, and the Melbern G. Glasscock Center for Humanities Research at Texas A&M University.

Notes

1. C. Mango, "The Development of Constantinople As an Urban Centre," In *The 17th International Byzantine Congress, Major Papers*, 117-36 (New Rochelle, New York: Aristide D. Caratzas, 1986): 121; Müller-Wiener, W., *Die Häfen von Byzantion - Konstantinupolis - Istanbul* (Tübingen: Ernst Wasmuth Verlag, 1994), 9.

2. C. Pulak, "Yenikapı Bizans Batıkları," In *Gün Işığında: İstanbul'un 8000 yılı. Marmaray, Metro, ve Sultanahmet Kazıları,* (Istanbul: Vehbi Koç Vakfı, 2007), 202-15 .

3. Post-excavation documentation of the ships is based primarily on methods developed by the late Richard Steffy, the founder of the Texas A&M University Center for Maritime Archaeology and Conservation Ship Reconstruction Laboratory. See J. R. Steffy, *Wooden Ship Building and the Interpretation of Shipwrecks* (College Station: Texas A&M University Press, 1994), 191-213.

4. H. Bernard-Maguiron, P. Coeuré, M. Clermont-Joly, J. Duchêne, P. Vaudaine, and P. Veysseyre, *Sauvé des Eaux: Le Patrimone Archéologique en Bois Histoires de Fouilles et de Restaurations* (Bron: ARC-Nucleart, 2007), 165-7.

References

Bernard-Maguiron, H., P. Coeuré, M. Clermont-Joly, J. Duchêne, P. Vaudaine, and P. Veysseyre. *Sauvé des Eaux: Le Patrimone Archéologique en Bois Histoires de Fouilles et de Restaurations*. Bron: ARC-Nucleart, 2007.

Mango, C. "The Development of Constantinople As an Urban Centre." In *The 17th International Byzantine Congress, Major Papers*, 117-36. New Rochelle, New York: Aristide D. Caratzas, 1986.

Müller-Wiener, W. *Die Häfen von Byzantion - Konstantinupolis - Istanbul*. Tübingen: Ernst Wasmuth Verlag, 1994.

Pulak, C. "Yenikapı Bizans Batıkları." In *Gün Işığında: İstanbul'un 8000 yılı. Marmaray, Metro, ve Sultanahmet Kazıları,* 202-15. Istanbul: Vehbi Koç Vakfı, 2007.

Steffy, J. R. *Wooden Ship Building and the Interpretation of Shipwrecks*. College Station: Texas A&M University Press, 1994.

Casting the Assemblage of Iron Artifacts from Kızılburun

Kimberly Rash
Texas A&M University

Figure 1: The nail-remover, before and after mechanical cleaning.

Between 2005 and 2009, a 1st century BC marble carrier was excavated under the direction of Donny Hamilton and Deborah Carlson near Çeşme, Turkey, along the western coast at a point designated as Kızılburun, or the Crimson Cape. The remains of this ship and its cargo included portions of wooden hull structure, ceramics and several tons of Proconnesian marble. A few interesting metal artifacts were also recovered. In the summer of 2008, these iron objects were analyzed and cast at the Institute of Nautical Archaeology (INA) conservation facility in Bodrum, Turkey. Although few in number so far, the metal finds represent an important collection of implements and equipment necessary for everyday shipboard functions.

The appearance and shape of heavily concreted objects rarely offer a definitive idea of the artifact within. It is first necessary to x-ray them to gain the most information possible prior to removing the concretion. Following radiography, the concretion must be strategically broken at a point where it will be easiest to clean out the inner cavities and be most beneficial in preventing loss or damage to any important features, thus ensuring an accurate replication. For most of the Kızılburun objects, the iron had long since corroded away, and it was possible to use the hollow concretions as a natural mold for casting a replica. Epoxy resin was poured into the cavities and allowed to harden, after which the encrustation was chiseled away. This process, used for decades in replicating concreted iron artifacts, has changed very little over time. The material for producing the cast has shifted from the use of polysulfide rubber, which hardens to a rubbery consistency and is now known to deteriorate over time, to the current use of epoxy resin, which hardens to a very dense solid and will hopefully keep its shape much longer.

Figure 2: The double-axe concretion and its x-ray, in which metallic portion is visible.

Figure 3: Axe-adze, before and after mechanical cleaning.

Four small iron objects from the Kızılburun wreck have been identified: a tool for removing nails, the head of a double axe, an axe-adze, and a portion of a chisel. Each object held its own set of challenges during conservation and had to be addressed accordingly. The nail-remover (fig. 1) produced a completely indiscernible x-ray. This forced the casting and mechanical cleaning to be done blindly, with only the hope that an identifiable object would emerge. After x-raying the double-axe concretion (fig. 2), it was apparent that the majority of the original metal still existed within the thick shell, therefore requiring a different treatment strategy altogether. A portion of the concretion has been removed and is currently undergoing passive chloride removal in a 2% sodium hydroxide solution. The axe-adze concretion contained different materials, including a portion of the tool's wooden handle, a small fragment of wood from another object concreted to the axe blade, and a copper nail, which required a more painstaking mechanical cleaning process (fig. 3). Finally, the concretion containing the chisel had been broken at both ends following deposition, ensuring that none of the original metal remained. Not even the usual thin surface which would have provided a more accurate representation of its features survived. The differing states of preservation found among these objects typifies the unpredictability of working with iron objects, even among artifacts from the same site.

The identity of the largest object remained a mystery until reconstructed in the laboratory, where it was discerned that a collection of broken concretions represented a fully intact Roman iron anchor, measuring 1.64 m in length (fig. 4). It had been stowed at the time of sinking, made clear by the fact that the anchor was lying on its own well-preserved stock and contained copper nails and impressions of planking within its massive iron bleed. Ring apertures occur at both ends, but only the upper ring survived in some small portion. The stock at this time is still awaiting mechanical cleaning, and details regarding its key features will be noted later. The Kızılburun iron anchor represents an important find due to its datable context as well as its presence on the same ship alongside composite anchors made of wood with lead stocks and collars, signifying the transition from the use of wooden anchors to the introduction of those made of iron and the eventual replacement of the former by the latter.

Figure 4: Iron anchor and stock, reconstructed as they appeared *in situ*.

As conservation of the Kızılburun wreck material is yet incomplete, it is hoped that even more iron objects will be identified in the remaining unprocessed concretions in the near future.

Acknowledgement

All the work on the Kızılburun iron objects has been made possible by the contributions of Bodrum's Özel Hospital, which made its digital radiography equipment available to INA free of charge.

Suggested Readings

Carlson, D.N. "A Monumental Cargo: The Roman Column Wreck at Kızılburun, Turkey." *INA Quarterly* 33:1 (2006): 3-10.

Carlson, D.N. "An Uplifting Summer: The 2006 Excavation Season at Kızılburun, Turkey." *INA Quarterly* 34:1 (2007): 3-10.

Carlson, D.N. and C.E. Atkins. "Leaving no Stone Unturned: The 2007 Excavation Season at Kızılburun, Turkey." *INA Annual* 1 (2008): 22-28.

Carlson, D.N. and D.L. Hamilton. "Kızılburun 2008: Shipwreck Research at the Bodrum Center." *INA Annual* 2 (2009): 11-14.

U.S.S. *Westfield*: Dahlgren and Ordnance Conservation

Andrew Thomson
Center for Maritime Archaeology and Conservation, Texas A&M University

Artifacts delivered to Texas A&M University's Conservation Research Laboratory (CRL) arrive from sites all across the globe, encompassing different cultures and periods of history. While they may be from different areas, most come from some of the harshest environments imaginable. Special care needs to be afforded to these artifacts to ensure they return to life. After a summer spent working at the CRL in the central Texas heat and humidity, I felt the same way.

Figure 1: Removing concretion: Brennan Bajdek, John Hamilton, and Andrew Thomson.

I was fortunate enough to start working at the CRL in January 2010, right around the time the lab received its contract to conserve remains of U.S.S. *Westfield*. This American Civil War gunboat was the flagship of the Union Navy's West Gulf Blockading Squadron that operated along the Texas coast. The boat ran aground off Galveston during the Confederate attempt to retake the city in late 1862. In order to prevent *Westfield*'s capture and future use by the rebels, Commander Renshaw scuttled by setting fire to the decks and magazine on 1 January 1863. Both he and the ship perished in the ensuing blast.

Figure 2: Shell in foreground, Dahlgren in background.

In response to planned dredging of the wreck, U.S.S. *Westfield* was excavated in a collaborative project involving PBS&J of Austin, the U.S. Army Corps of Engineers, Navy and Marines, and CMAC. Artifacts of particular interest found during the dredging included a cast iron Dahlgren cannon and its associated ordnance. I was lucky enough to be at the right place at the right time and am able to study these artifacts for my master's thesis topic.

The Dahlgren was delivered to the CRL in December, 2009, encased in nearly 150 year's worth of marine concretion. Due to it large size, however, it remained in a water tank until enough space could be freed to begin conservation. Breaking the shell of marine encrustation took place in the late spring in a flurry of hammers, chisels and air scribes. This part of the project was a combined effort of the lab's staff and had to happen quickly because of the tremendous effort required to repeatedly move the 9000-pound behemoth (fig. 1).

After removing the concretion, the Dahlgren was placed in a solution of sodium hydroxide and water. This bath was then electrically charged, with the tank receiving the positive charge and the artifact receiving the negative charge. Sodium hydroxide acts as an electrolyte that helps the flow of ions and reduces the oxidation of the metal artifact. The whole purpose of this process is to slowly remove the marine salts from the gun and effectively inhibit further corrosion.
Unfortunately, once this has started, there is not much to do but wait for the electrolytic reduction to work and observe its progress. This process is expected to last many months. It was during one of these progress checks this summer that the gun's serial number was found after additional cleaning. I am hopeful that with this new information I will be able to track the full life-cycle of the cannon, from casting, to its use in the Union Navy, to its dramatic abandonment.

While waiting for the Dahlgren to complete electrolytic reduction, I turned my attention toward the ordnance (fig. 2). At present, there are seventeen ammunition pieces from *Westfield* undergoing conservation. These include fifteen 80-pound, nine-inch diameter explosive shells, a canister shot, and a 220-pound, thirteen-inch diameter mortar shell. Each artifact needed to go through the same process as the gun, though on a much smaller and quicker scale.

The shells were easy enough to initially clean (fig. 3) and identify because they had previously been processed by the Marine divers at the excavation site. They drilled one hole in each ball to make certain they were safe and that any remaining black powder was inert. It was unfortunate that they had to damage the artifacts, but the knowledge that I should not blow up while working is a fair trade. This was actually a blessing in disguise. The holes were actually a blessing in disguise: after I widened them they provided a way to connect the shells to thte electrolytic anodes.

At this point, I carefully considered how to put the shells into the sodium hydroxide solution. The original fuses still remained in many of the balls. These are not only the most interesting part of the shells, but the fuses also provide the best diagnostic information. However, they are also the most delicate part of the ordnance, composed of threaded brass tubes stuffed with paper fuses, lit by a string wick that is covered with a lead tab. Each component must be conserved individually, if possible, as each one reacts differently to treatment. The lead cover and organic remains of the paper and wicks dissolve if left in electrolytic reduction, but respond well to dilute hydrochloric acid (HCl). Unfortunately, the HCl etches the brass pieces if left on too long. I am currently working on a combination of chemical and mechanical cleaning processes to separate each piece.

Figure 4: Andrew Thomson air scribing shell.

Another artifact I worked on throughout the summer was a canister shot (fig. 4). Originally I had no idea what I was working on. I had simply picked up a large cinderblock-sized concretion in order to practice using the lab's x-ray machine. With the help of fellow graduate student Catherine Sincich, I was able to detect faint outlines of the small iron balls. These images gave me an idea of what I was working with and how I should proceed.

Imagine a coffee can filled with solid iron shot the size of golf balls and stuffed with sawdust to keep them in place. These were fired out of *Westfield*'s artillery as anti-personnel rounds, much like an oversized shotgun shell. The cannister was a unique challenge to conserve on many levels.

After breaking through the shell of concretion, I saw that the canister was still in a remarkable state of preservation. There were remnants of the thin sheet metal casing surrounding the core of shot. I cleaned the exterior as best as I could and took photographs to document its overall appearance. I then broke the canister down, layer by layer. It was necessary to take apart the entire artifact for two reasons. First, it would show how the munition was put together. Second, it would not have survived the conservation process in one piece. That is the single biggest problem with conserving composite artifacts. Much like the fuses of the gun's shells, each material has to be treated individually and often in much different methods.

While other students worked on projects in Turkey, Spain, Bermuda and the Black Sea, I decided to stay closer to home in Texas. Why would I stay in the kiln that is a College Station summer when there are so many exciting field projects? Instead of surveying or diving I wanted to spend my break working on the sometimes overlooked aspect of nautical archaeology—conservation. The unique learning and training opportunities, the experience of working on different materials and multiple artifacts, and the knowledge that unexpected discoveries arise is invaluable, and only available at the CRL. This was the most important lesson from this past summer. That is, what to do with the artifacts once they are removed from an excavation. As I continue my graduate research in the Nautical Archaeology Program, and pursue a career in conservation, I am confident in the unparalleled hands-on education I am receiving at the CRL.

Figure 4: Andrew Thomson air scribing canister round.

21st Century Steamboat Archaeology: Three Dimensional Digitalization of the Red River Artifact Assemblage

Bradley A. Krueger
Center for Maritime Archaeology and Conservation, Texas A&M University

Figure 1: Brad Krueger recording points along an artifact.

Investigations of the steamboat *Heroine* are still underway in the New World Laboratory at Texas A&M University. Built in 1832 and sunk 1838, *Heroine* is the earliest example of a western river steamboat yet studied. The remains of the steamer's hull, machinery, cargo, and personal belongings continue to reveal much about frontier life and transportation in the 1830s. After seven years of field work on the Red River near Fort Towson, Oklahoma, excavations formally ended in the fall of 2008, but the project is far from over. As the last of the artifacts undergo conservation, new methodologies are being utilized to record and analyze these remnants of early steamboat culture and technology.

Until recently, researchers working with the *Heroine* assemblage relied on traditional recording methods for documenting each artifact .These included photography, videography, sketches, and more technically precise scaled drawings. While photography is a relatively quick process, drawings take substantially longer. Researchers use rulers, tapes, and dividers to measure every portion of an artifact in order to create a scaled hand drawing. They then create multiple copies in both pencil and ink that are of publication quality; it can take several days to record a single artifact from start to finish.

As the Red River relinquished its hold over the past and yielded increasingly more archaeological material, it became apparent that artifact recording was going to take a significant amount of time, energy, and patience. As recovered artifacts underwent stabilization and treatment at the Conservation Research Laboratory (CRL), a discussion began on how to best deal with such a large collection. The question arose, "How can we document these artifacts expeditiously without compromising the amount and quality of data being collected?"

In the fall of 2009, the CMAC attempted to answer this question by purchasing a FARO Laser ScanArm for the purpose of recording archaeological objects and artifacts. Manufactured by Faro International, a 'Faro Arm' is a fully articulated digitization device that captures points in three-dimensional space. This intricate measuring instrument has a wide variety of applications, including machine alignment and inspection, reverse engineering, crime scene and forensic analysis, facility management, and virtual simulation. Given their high degree of accuracy, efficiency, and versatility, archaeologists are now using these devices to assist in the documentation of sites, artifacts, and other cultural material. Organizations such as the Vasa Museum, the Norwegian Maritime Museum, and the Newport Medieval Ship Project are recording ship timbers and assorted artifacts with Faro Arms, but the archaeological application is in no way limited to the maritime realm.

CMAC's FARO Laser ScanArm can record data in one of two ways. The first method uses a spherical hard probe fixed to the end of the arm in a point-to-point based system (fig. 1). The user collects data by placing the hard probe at a specific location on the object and pressing a button, thereby recording that location as a three-dimension coordinate. By taking several points while moving along defined edges and features, the resulting data generates a point cloud loosely resembling the object (fig. 2). From here, the user connects the points into line segments and curves in order to develop a simple lines drawing, all without ever having to pick up a pencil or measuring tape (fig 3). Used in conjunction with Geomagic Studio 11, a three-dimensional reverse engineering software program, all lines drawings are printable or exportable to other 3-D computer programs in order to render, reconstruct, or reassemble a particular object (fig. 4).

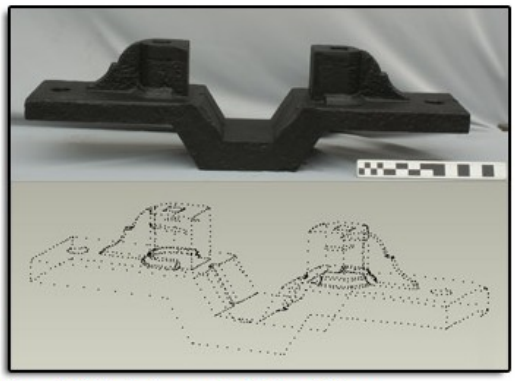

Figure 2: Artifact above and point cloud below.

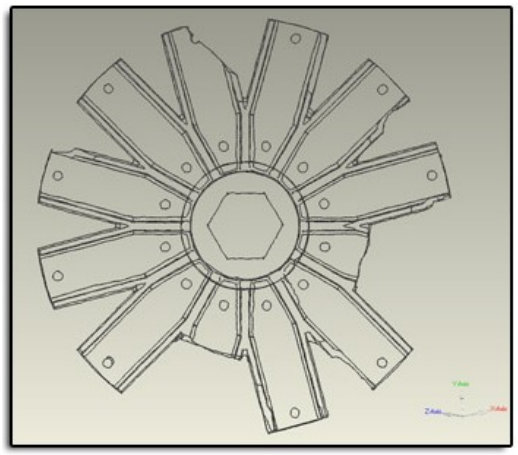

Figure 3: Flange showing line drawing produced from point cloud.

In addition to the hard probe, the FARO Laser ScanArm is equipped with a high-resolution laser scanner that offers a completely contact-free method of data capture. Mounted above the hard probe, the scanner emits a laser beam that records up to 19,200 points per second and is accurate to 0.0005 inches. Using the scanner like a paintbrush, researchers pass the laser back and forth over an object, and the results appear point-by-point on the computer screen. After scanning is complete, the software converts the millions of captured points to a polygon mesh that wraps around the scanned surface and forms a "water-tight" shell. The result is a high resolution, 3-D replica of the object created in a matter of minutes.

The Faro Arm's scanning capability is extremely well suited for recording archaeological material. Laser scanning is completely non-intrusive, as the Faro Arm never comes into direct contact with the object. This is ideal for delicate or fragile material that might suffer damage from excessive handling or manipulation during the recording process. Additionally, the scanning method can save time when documenting artifacts that have complex shapes or intricate designs not easily captured by the hard probe or more traditional methods. The laser scanner removes guesswork and virtually replicates the surface of the object with an amazing amount of detail and accuracy.

While there are several benefits to using the laser scanner for archaeological purposes, there are considerations to acknowledge ahead of time. Scanning yields much larger file sizes, requires more computer processing power, and can take more time to record than its hard probe counterpart. It warrants noting, however, that while each method of recording is traditionally used separately, scanning and hard probing can work in tandem with one another. Versatility of this kind is desirable when it is not always apparent how to progress with a particular artifact. The laser scanner and hard probe each have their own advantages, and are both more than capable to meet needs of archaeologists interested in digitizing artifact collections.

Regarding the *Heroine* project, graduate student researchers from the Nautical Archaeology Program (NAP) temporarily set aside pens and calipers, and picked up the Faro Arm in order to bring steamboat archaeology into the 21st century. While graduate students in the New World Laboratory have already drawn the majority of *Heroine's* considerable artifact assemblage, director Dr. Kevin Crisman decided to use the Faro Arm to record the remains of the steamboat's drive system. These heavy pieces of iron machinery included the drive shafts, bearing mounts, paddlewheel and flywheel flanges, fire grates, and a feed-water pipe. The precise measurement and images generated by the Faro Arm will contribute greatly in future reconstructions of the steamboat and its propulsion system. Some of these pieces have already undergone recording and/or reconstruction, but the data collected by the Faro Arm allows for an additional layer of redundancy that will ensure the preservation of information embedded within these unique archaeological specimens.

Figure 4: Artifact examples showing photograph on left and 3-D rendering on right.

Recording the *Heroine* machinery included a combination of both hard probe and laser capture depending on the complexity of each artifact. The majority of the recording took place at the CRL in winter of 2010. Over a one month period, a total of 52 pieces were carefully recorded using the Faro Arm, a task that would have taken significantly longer had traditional methods been used. NAP graduate student Brad Krueger recorded each piece with the hard probe method and later processed the lines drawings back in the New World Laboratory. For most objects, the points captured came from edges, boundaries, and features, making data collection a rather straightforward process. In the case of cylindrical objects, such as the drive shafts and feed water pipe that are devoid of defined edges, temporary chalk lines provided a guide to follow that ultimately gave shape to a 3-D virtual replica. Laser capture helped highlight specific artifact details that might otherwise be lost or ambiguous in a traditional reconstructed lines drawing.

There is great potential for CMAC researchers using a Faro Arm and it will undoubtedly aid in their quest to document hull and artifacts found on nautical archaeology projectst. The device proved extremely useful in recording the machinery components of the steamboat *Heroine* in terms of both accuracy and efficiency. Even if traditional recording methods are preferred, data collected by a Faro Arm can serve a purpose in a supplementary role. Three-dimensional artifact digitization is here to stay, so expect to see more high-tech archaeology and conservation from CMAC.

Suggested Readings

Brown, H. and K. Crisman. "News from the Red River: A Mid-Season Update on the Steamboat Heroine." *INA Quarterly* 32:4 (2005): 3-6.

Crisman, K. "The Heroine of the Red River." *INA Quarterly* 32:2 (2005): 3-10.

_____. "Easy as One-Two-Three: Completing the Steamboat Heroine Excavation." *INA Quarterly* 34:2 (2007): 3-12.

Crisman, K. and W. Lees. "Beneath the Red River's Waters: The Oklahoma Steamboat Project, Part I." *INA Quarterly* 30:2 (2003): 3-8.

Grieco, G. "Modeling an Early Western River Steamboat Engine." *INA Quarterly* 32:4 (2005): 7-11.

Attn: Jim Jobling
Conservation Research Laboratory
Nautical Archaeology Program
Texas A&M University
College Station, Texas 77843-4352

Phone: 979-862-7791
FAX: 979-845-6399
E-mail: crl@tamu.edu

Dahlgren undergoing conservation for the U.S. Navy.

---

http://nautarch.tamu.edu/

Over the past two decades Texas A&M University (TAMU), through its affiliation with the Institute of Nautical Archaeology (INA), the joint excavations of significant shipwrecks with INA, and the establishment of the Nautical Archaeology Program (NAP) in the Department of Anthropology, has become recognized as having one of the best nautical archaeology academic and research programs in the world. Over this same period, the conservation laboratories that are part of NAP have become very innovative and are acknowledged as being leaders in this field of conservation. In order to capitalize and build on this recognition, a Center for Maritime Archaeology and Conservation (CMAC) was created by the Texas A&M University Board of Regents in May 2005 as the best means by which the goals and mission of nautical archaeology at TAMU can be realized.

The mission of CMAC is simple. CMAC, as a research center at TAMU, and through its affiliation with INA and the Department of Oceanography, will continue to keep TAMU in the forefront of nautical, maritime, and underwater archaeology research. It will continue to build on our expertise in artifact conservation, advance underwater mapping technology, and build on the reputation it now has in these research areas. More simply put, CMAC's mission is to form research alliances such as the one we have with the INA in order to continue to be in the forefront of maritime archaeology research and be an active partner in one of the best academic programs in nautical archaeology in the world. To accomplish these ideals, CMAC has incorporated several varied laboratories specializing in various research areas and aspects of nautical archaeology.

By concentrating on these objectives, CMAC will accomplish this multifaceted mission, but we need your support. Contact us today to learn how you can contribute to our research efforts in exploring, documenting, conserving, and studying underwater archaeological sites, and educating the next generation of maritime archaeologists.

Attn: Kevin Crisman
Center for Maritime Archaeology & Conservation
Anthropology Building 107
Texas A&M University
College Station, TX 77843-4352
United States
